LAMBERTSON

Stainless Steel Products Manufacturer

FOOD SERVICE

Stainless Steel Products Manufacturer and High Quality Custom Fabrication

STANDARD STAINLESS STEEL FABRICATED PRODUCTS

SINKS
Hand
Compartment
Mop
Multi-user
Raw edge tubs
Drop in
Laundry tubs

INTEGRAL SINKS
Compartment-FS
Compartment-CS

DISH TABLES
Clean straight
Soiled straight
3 compartments soiled straight
Clean straight island
Clean corner
Soiled corner
3 compartments soiled corner
Clean L-Shape
Soiled L-Shape
3 compartments soiled L-Shape
Undercounter dish tables

DISH TABLES ACCESSORIES
Slant rack shelves
Dish tables under shelves
Silver soak sink
Quick drain
Rack slides
Scrap basket with rack slides
Sink covers

BAR EQUIPMENT
2 compartments bar sink
3 compartments bar sink
4 compartment bar sink
3 compartments with cocktail
4 compartments with cocktail
Single cocktail station
Double cocktail station
Drain board
Blender station
Blender station with sink
Bottle storage unit
Hand dump sink
Speed rail

TABLES
Standard
Bullnose
Standard enclosed
Bullnose enclosed
Polytop
Polytop/flower trough
Enclosed polytop
Enclosed polytop / flower trough
Maple top tables
Filler tables
Spreader tables
Prep tables
Leg basis
Equipment stands
Griddle stands

BAKER'S TABLES
Polytop
Polytop/flower trough
Enclosed polytop
Enclosed polytop / flower trough
Maple top tables

SHELVING
Wall shelves
Table mounted shelves
Zero gravity shelves
Shelves with pot racks

POT RACKS
Shelves with pot racks
Table mounted shelves with pot racks
Table mounted pot racks
Wall mounted pot racks
Ceiling mounted pot racks

CABINETS
Wall cabinets open base
Wall cabinets sliding doors
Wall cabinets hinged doors
Open base
Sliding doors
Hinged doors

FLOOR TROUGH
Subway grate
Fiber glass

CHEF'S CABINETS

HOODS
Type I
Type II
Fans
Hood packages
Ansul Fire Systems
Electrical Control Packages

CUSTOM STAINLESS STEEL FABRICATED PRODUCTS

High quality custom fabrication for workspaces that are not standardized.

FOOD SERVICE & SUPERMARKET

PLUMBING CONTRACTORS SPEC

INSTITUTIONAL CONSULTANT ENGINEERED PRODUCTS

MEDICAL & LABORATORY CHEMICAL GRADE

ENGINEERED HOOD SYSTEM

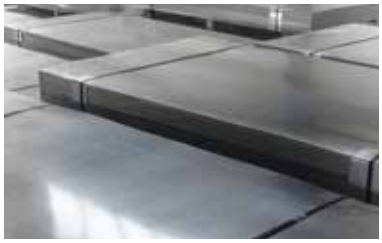

SHEET METAL FABRICATORS

CONTRACTORS SPEC

DON'T COMPROMISE QUALITY FOR COST

Expect the best, premier manufacturing with competitive pricing

SINKS

100% AMERICAN BUILT

STAINLESS STEEL COMMERCIAL

Sinks, where custom production methods
and quality are the standard.

TABLES

LAMBERTSON OFFERS A FULL LINE OF COMMERCIAL TABLES
(stainless, maple, poly and enclosed)

AMERICAN FABRICATED AS STANDARD AND CUSTOM
Lambertson offers a full line of work tables from economy 18ga 430 stainless to heavy duty industrial 14ga 304 stainless. We offer over 10,000 standard options from knockdown to fully welded, from open tables to enclosed, from poly top to maple top. Lambertson can support any of your everyday table needs along with your custom table needs.

UNDERBAR

CUSTOM + STANDARD

COMMERCIAL BAR EQUIPMENT

100% AMERICAN MADE

HOODS AND FANS

Lambertson's Type I exhaust hoods comply with the National Fire Protection Agency (NFPA-96) and are NSF certified. All Lambertson hoods are 100% stainless with ETL classified stainless baffle type filters. AVAILABLE UPON REQUEST (Fans, Ansul Fire Systems, and Electrical Control Packages).

LAMBERTSON TYPE I

U.L. LISTED HOODS

UL-BH-48

BOX EXHAUST HOOD

UL-BH-MUA-48

BOX EXHAUST W / MAKE-UP AIR

COMMERCIAL HOOD PACKAGES
U.L. LISTED

HOOD PACKAGES – TYPE I (CALL FOR PRICE)
- 100% Stainless Hood (Complete)
- Exhaust Fan (with flat roof curb)
- Filtered Air Supply Fan (with flat roof curb)
- Freight (F.O.B. Factory)

TYPE I U.L. LISTED HOODS
- 100% Stainless Hoods
- 18ga 430 (Stainless Bodies)
- 16ga 304 (Stainless Ends)
- 14ga 304 (Hood Hanger Brackets)
- 16ga 304 (Exhaust Collar 3”H) sent loose
- ETL Stainless Baffle Filters (Type I Hoods)
- S/S Grease Cup (Type I Hoods)
- U.L. Listed vapor proof canopy light fixtures
- Make-up Air Plenum (Option with Type I Hoods)

FANS

Exhaust Fans:
- Flat curb
- Pitched curb (Optional)
- Grease Box
- Hinge Kits

Supply Fans:
- Filtered
- Evaporative
- Heat
- Heat-Evaporative:
  - Flat curbs
  - Pitched curbs (Optional)

OPTIONS & ACCESSORIES (CALL FOR PRICE)
- Custom Hoods
- Ansul Fire Systems (Wall Mount / Hood Mount)
- Electrical Control Packages (Wall Mount Only)
- 20ga Stainless Wall Lining (Available with cap strips and divider bars)
- Duct Fire Wrap

HOOD PACKAGES – TYPE II (CALL FOR PRICE)
- 100% Stainless Hood (Complete)
- Exhaust Fan (with flat roof curb)
- Freight (F.O.B. Factory)

TYPE II VAPOR & HEAT HOODS
- 100% Stainless Hoods
- Standard 18”H with full perimeter liquid drain trough
- 18ga 430 (Stainless Bodies)
- 14ga 304 (Hood Hanger Brackets)

COMMERCIAL VENTILATION SOLUTIONS
Lambertson can provide Type I and Type II hoods to fit any application. We can help engineer your next system with the proper exhaust fans, make-up air fans, Ansul Fire systems, and Electrical Control packages as needed.

PLEASE CONTACT SALES@LAMBERTSON.COM
FOR A COMPETITIVE ESTIMATE
ON YOUR NEXT PROJECT.

SPECIFICATIONS

TOPS: 16-14 Gauge type 304 stainless steel with integrally formed backsplash with sanitary rolled edges on three sides. All joints are seam welded and all visible welds are ground smooth and polished.

TUBS: 16-14 Gauge type 304 stainless steel with 3 ½" die stamped center drain openings. All vertical and horizontal coved corners are a minimum 5/8" radius. Tubs are integrally welded to the tops.

LEGS: 16 Gauge 1-5/8" removable round stainless tubing. With stainless steel leg gussets and adjustable stainless steel bullet feet.

Lambertson's - Extensive range of NSF sinks are fabricated from flat stock to finished product entirely of 16 and 14 Gauge stainless steel. All joints are seem welded and all visible welds are ground smooth and polished to a #4 finish. 100% American Made.

FEATURES

- All one piece welded construction
- Radius die-stamped tub bottom for better drainage
- All drainboards have integral backsplashes
- Gussets located on sink tubs for greater support
- Turned up backsplash
- Tubs with a depth of 12'', 16'' and 18'' are available upon request

Custom Sinks available upon request

MECHANICAL

- Water supply is ½'' IPS Hot and Cold
- Faucet holes are on standard 8'' centers
- Faucet height is 37'' from floor
- Drains are 3 ½'' diameter. (Stainless steel basket drain with strainer are included)
- All dimensions are typical TOL ±.500''

Faucets are not included

C-SERIES

"LAMBERTSON'S ORIGINAL PATENT"

1. **Meets or exceeds all health standards**
2. **Reduces bacteria and odor**
3. **Allows air and water to flow under all washable items eliminating suction and cross-contamination**

CUSTOM SINKS AND ACCESSORIES AVAILABLE UPON REQUEST.

LAMBERTSON, INC. IS UPDATING AND RE-INTRODUCING ITS EXTENSIVE PRODUCT LINE TO THE FOOD SERVICE INDUSTRY.

Since our acquisition in August of 2015 the team has been working diligently, and continues to on developing an up to date product library with product family sale sheets, individual product specs, competitive pricing, and 100% American manufactured to support the business needs of the dealers and consultants within the food service industry.

See below the extensive product offering of compartment sinks with over 3,000 options to choose from and short lead times to delivery we are excited to support your business needs.

Visit our website at **WWW.LAMBERTSON.COM** for more about us. You can see the product families and categories that we will be launching in the coming months.

Thank you for your patience and we appreciate your consideration in our companies.

BUILD YOUR SINKS IN 6 EASY STEPS

1 COMPARTMENT

COMPARTMENT SINKS: Select 1,2,3 or 4 bowl as required.

SPACE SAVER COMPARTMENT SINKS: Select 3 bowl option only.

CORNER COMPARTMENT SINKS: Select 3 bowl option only.

2 PRODUCT SERIES

QUALITY LINE SINKS: 16ga Stainless Sinks / Stainless Steel Legs, Bracing FB, and Adjustable Bullet Feet.

SPEC LINE SINKS: 14ga Stainless Sinks / Stainless Steel Legs, Bracing FB & R, and Adjustable Bullet Feet.

3 DRAINBOARD SERIES

F-SERIES: is a “Flat” drainboard surface sloping toward the sink for moisture drainage.

P-SERIES: is a “Punched” drainboard surface with brake marks influencing the slope toward the sink for moisture drainage.

C-SERIES: is a “Corrugated Dry Zone” drainboard surface sloping toward the sink for moisture drainage. The surface is also punched with uniform lifts in sequence for 360 degree air circulation for all resting products.

S-SERIES: is a “Sloped” drainboard surface with a built-in slope for moisture drainage.

4 DRAINBOARD

Drainboards are an extension of the compartment sink. The reference left or right is referring to the position of the drainboard when facing and looking at the sink from the front.

- No Drainboard
- Left Drainboard
- Right Drainboard
- Double Drainboard

5 DRAINBOARD LENGTH

Drainboard lengths are measured from the turndown of the bowl to the outside of the lifted rolled edge.

6 BOWL SIZE

Bowl sizes are length left to right x width front to back. All standard Quality line sinks have a 12” bowl depth. All standard Spec line sinks have a 14” bowl depth.

PRICE LIST USD

USD - US CURRENCY, USA & INTERNATIONAL

SINKS

COMPARTMENT SINKS ..... P 8-19

INTEGRAL SINKS (FS) ..... P 19

INTEGRAL SINKS (CS) ..... P 20

MOP SINKS ..... P 20

MULTI-USERS SINKS ..... P 21

HAND SINKS ..... P 22

TABLES

STANDARD ..... P 23-37

BULLNOSE ..... P 38-51

HOODS

BOX EXHAUST HOOD ..... P 52

BOX EXHAUST W / MAKE-UP AIR ..... P 53

SINKS / **COMPARTMENT SINKS**

QUALITY LINE (F-SERIES)

16ga Stainless Sinks / Stainless Steel Legs, Bracing FB, and Adjustable Bullet Feet

MODEL # (1, 2, 3, or 4 compartment)	DRAINBOARD SERIES	DRAINBOARD	BOWL SIZE	DRAINBOARD LENGHT	1 COMP	2 COMP	3 COMP	4 COMP
QL-17	F-SERIES	NO DRAINBOARD	17" x 17"		$1 552	$2 365	$3 257	$4 186
QL-1723	F-SERIES	NO DRAINBOARD	17" x 23"		$1 568	$2 388	$3 290	$4 228
QL-18	F-SERIES	NO DRAINBOARD	18" x 18"		$1 584	$2 412	$3 323	$4 271
QL-1824	F-SERIES	NO DRAINBOARD	18" x 24"		$1 600	$2 436	$3 356	$4 313
QL-23	F-SERIES	NO DRAINBOARD	23" x 23"		$1 615	$2 461	$3 390	$4 356
QL-24	F-SERIES	NO DRAINBOARD	24" x 24"		$1 632	$2 485	$3 423	$4 400
QL-29	F-SERIES	NO DRAINBOARD	29" x 29"		$1 648	$2 510	$3 458	$4 444
QL-2923	F-SERIES	NO DRAINBOARD	29" x 23"		$1 664	$2 535	$3 492	$4 488
QL-1620	F-SERIES	NO DRAINBOARD	16" x 20"		$1 681	$2 560	$3 527	$4 533
QL-2020	F-SERIES	NO DRAINBOARD	20" x 20"		$1 698	$2 586	$3 562	$4 579
QL-2028	F-SERIES	NO DRAINBOARD	20" x 28"		$1 715	$2 612	$3 598	$4 624
QL-17-18-F	F-SERIES	RIGHT / LEFT	17" x 17"	18"	$1 615	$2 434	$3 321	$4 274
QL-17-24-F	F-SERIES	RIGHT / LEFT	17" x 17"	24"	$1 631	$2 458	$3 355	$4 317
QL-1723-18-F	F-SERIES	RIGHT / LEFT	17" x 23"	18"	$1 647	$2 483	$3 388	$4 360
QL-1723-24-F	F-SERIES	RIGHT / LEFT	17" x 23"	24"	$1 664	$2 507	$3 422	$4 404
QL-18-18-F	F-SERIES	RIGHT / LEFT	18" x 18"	18"	$1 680	$2 532	$3 456	$4 448
QL-18-24-F	F-SERIES	RIGHT / LEFT	18" x 18"	24"	$1 697	$2 558	$3 491	$4 492
QL-1824-18-F	F-SERIES	RIGHT / LEFT	18" x 24"	18"	$1 714	$2 583	$3 526	$4 537
QL-1824-24-F	F-SERIES	RIGHT / LEFT	18" x 24"	24"	$1 731	$2 609	$3 561	$4 583
QL-23-24-F	F-SERIES	RIGHT / LEFT	23" x 23"	24"	$1 749	$2 635	$3 597	$4 629
QL-23-30-F	F-SERIES	RIGHT / LEFT	23" x 23"	30"	$1 766	$2 662	$3 633	$4 675
QL-24-18-F	F-SERIES	RIGHT / LEFT	24" x 24"	18"	$1 784	$2 688	$3 669	$4 722
QL-24-24-F	F-SERIES	RIGHT / LEFT	24" x 24"	24"	$1 802	$2 715	$3 706	$4 769
QL-24-30-F	F-SERIES	RIGHT / LEFT	24" x 24"	30"				$4 817
QL-2923-30-F	F-SERIES	RIGHT / LEFT	29" x 23"	30"	$1 820	$2 742	$3 743	$4 865
QL-2923-36-F	F-SERIES	RIGHT / LEFT	29" x 23"	36"	$1 838	$2 770	$3 780	$4 913
QL-29-30-F	F-SERIES	RIGHT / LEFT	29" x 29"	30"	$1 856	$2 797	$3 818	$4 962
QL-29-36-F	F-SERIES	RIGHT / LEFT	29" x 29"	36"	$1 875	$2 825	$3 856	$5 012
QL-1620-18-F	F-SERIES	RIGHT / LEFT	16" x 20"	18"	$1 894	$2 854	$3 895	$5 062
QL-2020-20-F	F-SERIES	RIGHT / LEFT	20" x 20"	20"	$1 913	$2 882	$3 934	$5 113
QL-2028-20-F	F-SERIES	RIGHT / LEFT	20" x 28"	20"	$1 932	$2 911	$3 973	$5 164
QL-17-218-F	F-SERIES	DOUBLE	17" x 17"	18"	$1 677	$2 498	$3 382	$4 335
QL-17-224-F	F-SERIES	DOUBLE	17" x 17"	24"	$1 694	$2 523	$3 415	$4 378
QL-1723-218-F	F-SERIES	DOUBLE	17" x 23"	18"	$1 711	$2 548	$3 450	$4 422
QL-1723-224-F	F-SERIES	DOUBLE	17" x 23"	24"	$1 728	$2 573	$3 484	$4 466
QL-18-218-F	F-SERIES	DOUBLE	18" x 18"	18"	$1 745	$2 599	$3 519	$4 511
QL-18-224-F	F-SERIES	DOUBLE	18" x 18"	24"	$1 763	$2 625	$3 554	$4 556
QL-1824-218-F	F-SERIES	DOUBLE	18" x 24"	18"	$1 781	$2 651	$3 590	$4 601
QL-1824-224-F	F-SERIES	DOUBLE	18" x 24"	24"	$1 798	$2 678	$3 626	$4 647
QL-23-224-F	F-SERIES	DOUBLE	23" x 23"	24"	$1 816	$2 705	$3 662	$4 694
QL-23-230-F	F-SERIES	DOUBLE	23" x 23"	30"	$1 834	$2 732	$3 698	$4 741
QL-24-218-F	F-SERIES	DOUBLE	24" x 24"	18"	$1 853	$2 759	$3 735	$4 788

QUALITY LINE (F-SERIES)

16ga Stainless Sinks / Stainless Steel Legs, Bracing FB, and Adjustable Bullet Feet

MODEL # (1, 2, 3, or 4 compartment)	DRAINBOARD SERIES	DRAINBOARD	BOWL SIZE	DRAINBOARD LENGHT	1 COMP	2 COMP	3 COMP	4 COMP
QL-24-224-F	F-SERIES	DOUBLE	24” x 24”	24”	$1 871	$2 787	$3 773	$4 836
QL-2923-230-F	F-SERIES	DOUBLE	29” x 23”	30”	$1 890	$2 815	$3 811	$4 884
QL-2923-236-F	F-SERIES	DOUBLE	29” x 23”	36”	$1 909	$2 843	$3 849	$4 933
QL-29-230-F	F-SERIES	DOUBLE	29” x 29”	30”	$1 928	$2 871	$3 887	$4 983
QL-29-236-F	F-SERIES	DOUBLE	29” x 29”	36”	$1 947	$2 900	$3 926	$5 032
QL-1620-218-F	F-SERIES	DOUBLE	16” x 20”	18”	$1 967	$2 929	$3 965	$5 083
QL-2020-220-F	F-SERIES	DOUBLE	20” x 20”	20”	$1 986	$2 958	$4 005	$5 134
QL-2028-220-F	F-SERIES	DOUBLE	20” x 28”	20”	$2 006	$2 988	$4 045	$5 185
QL-3-LC-12-212-F	F-SERIES	CORNER	12” x 12”	12”			$3 379	
QL-3-LC-12-218-F	F-SERIES	CORNER	12” x 12”	18”			$3 413	
QL-3-LC-12-220-F	F-SERIES	CORNER	12” x 12”	20”			$3 447	
QL-3-LC-12-224-F	F-SERIES	CORNER	12” x 12”	24”			$3 481	
QL-3-LC-17-218-F	F-SERIES	CORNER	17” x 17”	18”			$3 516	
QL-3-LC-20-220-F	F-SERIES	CORNER	20” x 20”	20”			$3 551	
QL-3-LC-23-224-F	F-SERIES	CORNER	23” x 23”	24”			$3 587	
SS-QL-3-1014-212-F	F-SERIES	SPACE SAVER	10” x 14”	12”			$2 650	
SS-QL-3-1014-218-F	F-SERIES	SPACE SAVER	10” x 14”	18”			$2 676	
SS-QL-3-16-216-F	F-SERIES	SPACE SAVER	16” x 16”	16”			$2 703	
SS-QL-4-1014-212-F	F-SERIES	SPACE SAVER	10” x 14”	12”				$3 194
SS-QL-4-1014-218-F	F-SERIES	SPACE SAVER	10” x 14”	18”				$3 226
SS-QL-4-1517-215-F	F-SERIES	SPACE SAVER	15” x 17”	15”				$3 258
SS-QL-4-1619-215-F	F-SERIES	SPACE SAVER	16” x 19”	15”				$3 291

QUALITY LINE (P-SERIES)

16ga Stainless Sinks / Stainless Steel Legs, Bracing FB, and Adjustable Bullet Feet

MODEL # (1, 2, 3, or 4 compartment)	DRAINBOARD SERIES	DRAINBOARD	BOWL SIZE	DRAINBOARD LENGHT	1 COMP	2 COMP	3 COMP	4 COMP
QL-17-18-P	P-SERIES	RIGHT / LEFT	17” x 17”	18”	$1 655	$2 494	$3 404	$4 381
QL-17-24-P	P-SERIES	RIGHT / LEFT	17” x 17”	24”	$1 672	$2 519	$3 438	$4 425
QL-1723-18-P	P-SERIES	RIGHT / LEFT	17” x 23”	18”	$1 689	$2 545	$3 473	$4 469
QL-1723-24-P	P-SERIES	RIGHT / LEFT	17” x 23”	24”	$1 705	$2 570	$3 508	$4 514
QL-18-18-P	P-SERIES	RIGHT / LEFT	18” x 18”	18”	$1 722	$2 596	$3 543	$4 559
QL-18-24-P	P-SERIES	RIGHT / LEFT	18” x 18”	24”	$1 740	$2 622	$3 578	$4 605
QL-1824-18-P	P-SERIES	RIGHT / LEFT	18” x 24”	18”	$1 757	$2 648	$3 614	$4 651
QL-1824-24-P	P-SERIES	RIGHT / LEFT	18” x 24”	24”	$1 775	$2 674	$3 650	$4 697
QL-23-24-P	P-SERIES	RIGHT / LEFT	23” x 23”	24”	$1 792	$2 701	$3 687	$4 744
QL-23-30-P	P-SERIES	RIGHT / LEFT	23” x 23”	30”	$1 810	$2 728	$3 723	$4 792
QL-24-18-P	P-SERIES	RIGHT / LEFT	24” x 24”	18”	$1 828	$2 755	$3 761	$4 840
QL-24-24-P	P-SERIES	RIGHT / LEFT	24” x 24”	24”	$1 847	$2 783	$3 798	$4 888
QL-24-30-P	P-SERIES	RIGHT / LEFT	24” x 30”	30”				$4 937
QL-2923-30-P	P-SERIES	RIGHT / LEFT	29” x 23”	30”	$1 865	$2 811	$3 836	$4 986

QUALITY LINE (P-SERIES)

16ga Stainless Sinks / Stainless Steel Legs, Bracing FB, and Adjustable Bullet Feet

MODEL # (1, 2, 3, or 4 compartment)	DRAINBOARD SERIES	DRAINBOARD	BOWL SIZE	DRAINBOARD LENGHT	1 COMP	2 COMP	3 COMP	4 COMP
QL-2923-36-P	P-SERIES	RIGHT / LEFT	29” x 23”	30”	$1 884	$2 839	$3 875	$5 036
QL-29-30-P	P-SERIES	RIGHT / LEFT	29” x 29”	36”	$1 903	$2 867	$3 913	$5 087
QL-29-36-P	P-SERIES	RIGHT / LEFT	29” x 29”	30”	$1 922	$2 896	$3 952	$5 137
QL-1620-18-P	P-SERIES	RIGHT / LEFT	16” x 20”	36”	$1 941	$2 925	$3 992	$5 189
QL-2020-20-P	P-SERIES	RIGHT / LEFT	20” x 20”	18”	$1 960	$2 954	$4 032	$5 241
QL-2028-20-P	P-SERIES	RIGHT / LEFT	20” x 28”	20”	$1 980	$2 984	$4 072	$5 293
QL-17-218-P	P-SERIES	DOUBLE	17” x 17”	18”	$1 719	$2 560	$3 466	$4 443
QL-17-224-P	P-SERIES	DOUBLE	17” x 17”	24”	$1 736	$2 586	$3 501	$4 487
QL-1723-218-P	P-SERIES	DOUBLE	17” x 23”	18”	$1 754	$2 612	$3 536	$4 532
QL-1723-224-P	P-SERIES	DOUBLE	17” x 23”	24”	$1 771	$2 638	$3 571	$4 578
QL-18-218-P	P-SERIES	DOUBLE	18” x 18”	18”	$1 789	$2 664	$3 607	$4 623
QL-18-224-P	P-SERIES	DOUBLE	18” x 18”	24”	$1 807	$2 691	$3 643	$4 670
QL-1824-218-P	P-SERIES	DOUBLE	18” x 24”	18”	$1 825	$2 718	$3 679	$4 716
QL-1824-224-P	P-SERIES	DOUBLE	18” x 24”	24”	$1 843	$2 745	$3 716	$4 764
QL-23-224-P	P-SERIES	DOUBLE	23” x 23”	24”	$1 862	$2 772	$3 753	$4 811
QL-23-230-P	P-SERIES	DOUBLE	23” x 23”	30”	$1 880	$2 800	$3 791	$4 859
QL-24-218-P	P-SERIES	DOUBLE	24” x 24”	18”	$1 899	$2 828	$3 829	$4 908
QL-24-224-P	P-SERIES	DOUBLE	24” x 24”	24”	$1 918	$2 856	$3 867	$4 957
QL-2923-230-P	P-SERIES	DOUBLE	29” x 23”	30”	$1 937	$2 885	$3 906	$5 007
QL-2923-236-P	P-SERIES	DOUBLE	29” x 23”	36”	$1 957	$2 914	$3 945	$5 057
QL-29-230-P	P-SERIES	DOUBLE	29” x 29”	30”	$1 976	$2 943	$3 984	$5 107
QL-29-236-P	P-SERIES	DOUBLE	29” x 29”	36”	$1 996	$2 972	$4 024	$5 158
QL-1620-218-P	P-SERIES	DOUBLE	16” x 20”	18”	$2 016	$3 002	$4 064	$5 210
QL-2020-220-P	P-SERIES	DOUBLE	20” x 20”	20”	$2 036	$3 032	$4 105	$5 262
QL-2028-220-P	P-SERIES	DOUBLE	20” x 28”	20”	$2 056	$3 062	$4 146	$5 315
QL-3-LC-12-212-P	P-SERIES	CORNER	12” x 12”	12”			$3 464	
QL-3-LC-12-218-P	P-SERIES	CORNER	12” x 12”	18”			$3 498	
QL-3-LC-12-220-P	P-SERIES	CORNER	12” x 12”	20”			$3 533	
QL-3-LC-12-224-P	P-SERIES	CORNER	12” x 12”	24”			$3 568	
QL-3-LC-17-218-P	P-SERIES	CORNER	17” x 17”	18”			$3 604	
QL-3-LC-20-220-P	P-SERIES	CORNER	20” x 20”	20”			$3 640	
QL-3-LC-23-224-P	P-SERIES	CORNER	23” x 23”	24”			$3 677	
SS-QL-3-1014-212-P	P-SERIES	SPACE SAVER	10” x 14”	12”			$2 716	
SS-QL-3-1014-218-P	P-SERIES	SPACE SAVER	10” x 14”	18”			$2 743	
SS-QL-3-16-216-P	P-SERIES	SPACE SAVER	16” x 16”	16”			$2 771	
SS-QL-4-1014-212-P	P-SERIES	SPACE SAVER	10” x 14”	12”				$3 274
SS-QL-4-1014-218-P	P-SERIES	SPACE SAVER	10” x 14”	18”				$3 307
SS-QL-4-1517-215-P	P-SERIES	SPACE SAVER	15” x 17”	15”				$3 340
SS-QL-4-1619-215-P	P-SERIES	SPACE SAVER	16” x 19”	15”				$3 373

QUALITY LINE (C-SERIES)

16ga Stainless Sinks / Stainless Steel Legs, Bracing FB, and Adjustable Bullet Feet

MODEL # (1, 2, 3, or 4 compartment)	DRAINBOARD SERIES	DRAINBOARD	BOWL SIZE	DRAINBOARD LENGHT	1 COMP	2 COMP	3 COMP	4 COMP
QL-17-18-C	C-SERIES	RIGHT / LEFT	17” x 17”	18”	$1 738	$2 619	$3 575	$4 600
QL-17-24-C	C-SERIES	RIGHT / LEFT	17” x 17”	24”	$1 755	$2 645	$3 610	$4 646
QL-1723-18-C	C-SERIES	RIGHT / LEFT	17” x 23”	18”	$1 773	$2 672	$3 647	$4 693
QL-1723-24-C	C-SERIES	RIGHT / LEFT	17” x 23”	24”	$1 791	$2 699	$3 683	$4 740
QL-18-18-C	C-SERIES	RIGHT / LEFT	18” x 18”	18”	$1 809	$2 726	$3 720	$4 787
QL-18-24-C	C-SERIES	RIGHT / LEFT	18” x 18”	24”	$1 827	$2 753	$3 757	$4 835
QL-1824-18-C	C-SERIES	RIGHT / LEFT	18” x 24”	18”	$1 845	$2 780	$3 795	$4 883
QL-1824-24-C	C-SERIES	RIGHT / LEFT	18” x 24”	24”	$1 863	$2 808	$3 833	$4 932
QL-23-24-C	C-SERIES	RIGHT / LEFT	23” x 23”	24”	$1 882	$2 836	$3 871	$4 982
QL-23-30-C	C-SERIES	RIGHT / LEFT	23” x 23”	30”	$1 901	$2 865	$3 910	$5 031
QL-24-18-C	C-SERIES	RIGHT / LEFT	24” x 24”	18”	$1 920	$2 893	$3 949	$5 082
QL-24-24-C	C-SERIES	RIGHT / LEFT	24” x 24”	24”	$1 939	$2 922	$3 988	$5 132
QL-24-30-C	C-SERIES	RIGHT / LEFT	24” x 24”	30”				$5 184
QL-2923-30-C	C-SERIES	RIGHT / LEFT	29” x 23”	30”	$1 958	$2 951	$4 028	$5 236
QL-2923-36-C	C-SERIES	RIGHT / LEFT	29” x 23”	36”	$1 978	$2 981	$4 068	$5 288
QL-29-30-C	C-SERIES	RIGHT / LEFT	29” x 29”	30”	$1 998	$3 011	$4 109	$5 341
QL-29-36-C	C-SERIES	RIGHT / LEFT	29” x 29”	36”	$2 018	$3 041	$4 150	$5 394
QL-1620-18-C	C-SERIES	RIGHT / LEFT	16” x 20”	18”	$2 038	$3 071	$4 192	$5 448
QL-2020-20-C	C-SERIES	RIGHT / LEFT	20” x 20”	20”	$2 058	$3 102	$4 234	$5 503
QL-2028-20-C	C-SERIES	RIGHT / LEFT	20” x 28”	20”	$2 079	$3 133	$4 276	$5 558
QL-17-218-C	C-SERIES	DOUBLE	17” x 17”	18”	$1 805	$2 688	$3 640	$4 665
QL-17-224-C	C-SERIES	DOUBLE	17” x 17”	24”	$1 823	$2 715	$3 676	$4 712
QL-1723-218-C	C-SERIES	DOUBLE	17” x 23”	18”	$1 842	$2 742	$3 713	$4 759
QL-1723-224-C	C-SERIES	DOUBLE	17” x 23”	24”	$1 860	$2 770	$3 750	$4 807
QL-18-218-C	C-SERIES	DOUBLE	18” x 18”	18”	$1 879	$2 797	$3 787	$4 855
QL-18-224-C	C-SERIES	DOUBLE	18” x 18”	24”	$1 897	$2 825	$3 825	$4 903
QL-1824-218-C	C-SERIES	DOUBLE	18” x 24”	18”	$1 916	$2 854	$3 863	$4 952
QL-1824-224-C	C-SERIES	DOUBLE	18” x 24”	24”	$1 935	$2 882	$3 902	$5 002
QL-23-224-C	C-SERIES	DOUBLE	23” x 23”	24”	$1 955	$2 911	$3 941	$5 052
QL-23-230-C	C-SERIES	DOUBLE	23” x 23”	30”	$1 974	$2 940	$3 980	$5 102
QL-24-218-C	C-SERIES	DOUBLE	24” x 24”	18”	$1 994	$2 969	$4 020	$5 153
QL-24-224-C	C-SERIES	DOUBLE	24” x 24”	24”	$2 014	$2 999	$4 060	$5 205
QL-2923-230-C	C-SERIES	DOUBLE	29” x 23”	30”	$2 034	$3 029	$4 101	$5 257
QL-2923-236-C	C-SERIES	DOUBLE	29” x 23”	36”	$2 055	$3 059	$4 142	$5 309
QL-29-230-C	C-SERIES	DOUBLE	29” x 29”	30”	$2 075	$3 090	$4 184	$5 363
QL-29-236-C	C-SERIES	DOUBLE	29” x 29”	36”	$2 096	$3 121	$4 225	$5 416
QL-1620-218-C	C-SERIES	DOUBLE	16” x 20”	18”	$2 117	$3 152	$4 268	$5 470
QL-2020-220-C	C-SERIES	DOUBLE	20” x 20”	20”	$2 138	$3 184	$4 310	$5 525
QL-2028-220-C	C-SERIES	DOUBLE	20” x 28”	20”	$2 159	$3 215	$4 353	$5 580
QL-3-LC-12-212-C	C-SERIES	CORNER	12” x 12”	12”			$3 637	
QL-3-LC-12-218-C	C-SERIES	CORNER	12” x 12”	18”			$3 673	
QL-3-LC-12-220-C	C-SERIES	CORNER	12” x 12”	20”			$3 710	

QUALITY LINE (C-SERIES)
16ga Stainless Sinks / Stainless Steel Legs, Bracing FB, and Adjustable Bullet Feet

MODEL # (1, 2, 3, or 4 compartment)	DRAINBOARD SERIES	DRAINBOARD	BOWL SIZE	DRAINBOARD LENGHT	1 COMP	2 COMP	3 COMP	4 COMP
QL-3-LC-12-224-C	C-SERIES	CORNER	12” x 12”	24”			$3 747	
QL-3-LC-17-218-C	C-SERIES	CORNER	17” x 17”	18”			$3 784	
QL-3-LC-20-220-C	C-SERIES	CORNER	20” x 20”	20”			$3 822	
QL-3-LC-23-224-C	C-SERIES	CORNER	23” x 23”	24”			$3 860	
SS-QL-3-1014-212-C	C-SERIES	SPACE SAVER	10” x 14”	12”			$2 852	
SS-QL-3-1014-218-C	C-SERIES	SPACE SAVER	10” x 14”	18”			$2 880	
SS-QL-3-16-216-C	C-SERIES	SPACE SAVER	16” x 16”	16”			$2 909	
SS-QL-4-1014-212-C	C-SERIES	SPACE SAVER	10” x 14”	12”				$3 438
SS-QL-4-1014-218-C	C-SERIES	SPACE SAVER	10” x 14”	18”				$3 472
SS-QL-4-1517-215-C	C-SERIES	SPACE SAVER	15” x 17”	15”				$3 507
SS-QL-4-1619-215-C	C-SERIES	SPACE SAVER	16” x 19”	15”				$3 542

QUALITY LINE (S-SERIES)
16ga Stainless Sinks / Stainless Steel Legs, Bracing FB, and Adjustable Bullet Feet

MODEL # (1, 2, 3, or 4 compartment)	DRAINBOARD SERIES	DRAINBOARD	BOWL SIZE	DRAINBOARD LENGHT	1 COMP	2 COMP	3 COMP	4 COMP
QL-17-18-S	S-SERIES	RIGHT / LEFT	17” x 17”	18”	$1 912	$2 881	$3 932	$5 060
QL-17-24-S	S-SERIES	RIGHT / LEFT	17” x 17”	24”	$1 931	$2 910	$3 971	$5 111
QL-1723-18-S	S-SERIES	RIGHT / LEFT	17” x 23”	18”	$1 950	$2 939	$4 011	$5 162
QL-1723-24-S	S-SERIES	RIGHT / LEFT	17” x 23”	24”	$1 970	$2 968	$4 051	$5 214
QL-18-18-S	S-SERIES	RIGHT / LEFT	18” x 18”	18”	$1 989	$2 998	$4 092	$5 266
QL-18-24-S	S-SERIES	RIGHT / LEFT	18” x 18”	24”	$2 009	$3 028	$4 133	$5 319
QL-1824-18-S	S-SERIES	RIGHT / LEFT	18” x 24”	18”	$2 029	$3 058	$4 174	$5 372
QL-1824-24-S	S-SERIES	RIGHT / LEFT	18” x 24”	24”	$2 050	$3 089	$4 216	$5 425
QL-23-24-S	S-SERIES	RIGHT / LEFT	23” x 23”	24”	$2 070	$3 120	$4 258	$5 480
QL-23-30-S	S-SERIES	RIGHT / LEFT	23” x 23”	30”	$2 091	$3 151	$4 301	$5 534
QL-24-18-S	S-SERIES	RIGHT / LEFT	24” x 24”	18”	$2 112	$3 183	$4 344	$5 590
QL-24-24-S	S-SERIES	RIGHT / LEFT	24” x 24”	24”	$2 133	$3 214	$4 387	$5 646
QL-24-30-S	S-SERIES	RIGHT / LEFT	24” x 24”	30”				$5 702
QL-2923-30-S	S-SERIES	RIGHT / LEFT	29” x 23”	30”	$2 154	$3 246	$4 431	$5 759
QL-2923-36-S	S-SERIES	RIGHT / LEFT	29” x 23”	36”	$2 176	$3 279	$4 475	$5 817
QL-29-30-S	S-SERIES	RIGHT / LEFT	29” x 29”	36”	$2 198	$3 312	$4 520	$5 875
QL-29-36-S	S-SERIES	RIGHT / LEFT	29” x 29”	36”	$2 220	$3 345	$4 565	$5 934
QL-1620-18-S	S-SERIES	RIGHT / LEFT	16” x 20”	18”	$2 242	$3 378	$4 611	$5 993
QL-2020-20-S	S-SERIES	RIGHT / LEFT	20” x 20”	20”	$2 264	$3 412	$4 657	$6 053
QL-2028-20-S	S-SERIES	RIGHT / LEFT	20” x 28”	20”	$2 287	$3 446	$4 703	$6 114
QL-17-218-S	S-SERIES	DOUBLE	17” x 17”	18”	$1 986	$2 957	$4 003	$5 132
QL-17-224-S	S-SERIES	DOUBLE	17” x 17”	24”	$2 006	$2 987	$4 044	$5 183
QL-1723-218-S	S-SERIES	DOUBLE	17” x 23”	18”	$2 026	$3 016	$4 084	$5 235
QL-1723-224-S	S-SERIES	DOUBLE	17” x 23”	24”	$2 046	$3 047	$4 125	$5 287
QL-18-218-S	S-SERIES	DOUBLE	18” x 18”	18”	$2 066	$3 077	$4 166	$5 340
QL-18-224-S	S-SERIES	DOUBLE	18” x 18”	24”	$2 087	$3 108	$4 208	$5 393
QL-1824-218-S	S-SERIES	DOUBLE	18” x 24”	18”	$2 108	$3 139	$4 250	$5 447

SINKS / **COMPARTMENT SINKS**

QUALITY LINE (S-SERIES)

16ga Stainless Sinks / Stainless Steel Legs, Bracing FB, and Adjustable Bullet Feet

MODEL # (1, 2, 3, or 4 compartment)	DRAINBOARD SERIES	DRAINBOARD	BOWL SIZE	DRAINBOARD LENGHT	1 COMP	2 COMP	3 COMP	4 COMP
QL-1824-224-S	S-SERIES	DOUBLE	18” x 24”	24”	$2 129	$3 170	$4 292	$5 502
QL-23-224-S	S-SERIES	DOUBLE	23” x 23”	24”	$2 150	$3 202	$4 335	$5 557
QL-23-230-S	S-SERIES	DOUBLE	23” x 23”	30”	$2 172	$3 234	$4 379	$5 612
QL-24-218-S	S-SERIES	DOUBLE	24” x 24”	18”	$2 193	$3 266	$4 422	$5 669
QL-24-224-S	S-SERIES	DOUBLE	24” x 24”	24”	$2 215	$3 299	$4 467	$5 725
QL-2923-230-S	S-SERIES	DOUBLE	29” x 23”	30”	$2 238	$3 332	$4 511	$5 783
QL-2923-236-S	S-SERIES	DOUBLE	29” x 23”	36”	$2 260	$3 365	$4 556	$5 840
QL-29-230-S	S-SERIES	DOUBLE	29” x 29”	30”	$2 283	$3 399	$4 602	$5 899
QL-29-236-S	S-SERIES	DOUBLE	29” x 29”	36”	$2 305	$3 433	$4 648	$5 958
QL-1620-218-S	S-SERIES	DOUBLE	16” x 20”	18”	$2 328	$3 467	$4 694	$6 017
QL-2020-220-S	S-SERIES	DOUBLE	20” x 20”	20”	$2 352	$3 502	$4 741	$6 078
QL-2028-220-S	S-SERIES	DOUBLE	20” x 28”	20”	$2 375	$3 537	$4 789	$6 138
QL-3-LC-12-212-S	S-SERIES	CORNER	12” x 12”	12”			$4 000	
QL-3-LC-12-218-S	S-SERIES	CORNER	12” x 12”	18”			$4 040	
QL-3-LC-12-220-S	S-SERIES	CORNER	12” x 12”	20”			$4 081	
QL-3-LC-12-224-S	S-SERIES	CORNER	12” x 12”	24”			$4 122	
QL-3-LC-17-218-S	S-SERIES	CORNER	17” x 17”	18”			$4 163	
QL-3-LC-20-220-S	S-SERIES	CORNER	20” x 20”	20”			$4 204	
QL-3-LC-23-224-S	S-SERIES	CORNER	23” x 23”	24”			$4 246	
SS-QL-3-1014-212-S	S-SERIES	SPACE SAVER	10” x 14”	12”			$3 137	
SS-QL-3-1014-218-S	S-SERIES	SPACE SAVER	10” x 14”	18”			$3 168	
SS-QL-3-16-216-S	S-SERIES	SPACE SAVER	16” x 16”	16”			$3 200	
SS-QL-4-1014-212-S	S-SERIES	SPACE SAVER	10” x 14”	12”				$3 781
SS-QL-4-1014-218-S	S-SERIES	SPACE SAVER	10” x 14”	18”				$3 819
SS-QL-4-1517-215-S	S-SERIES	SPACE SAVER	15” x 17”	15”				$3 857
SS-QL-4-1619-215-S	S-SERIES	SPACE SAVER	16” x 19”	15”				$3 896

SPEC LINE (F-SERIES)

14ga Stainless Sinks / Stainless Steel Legs , Bracing FB & R, and Adjustable Bullet Feet

MODEL # (1, 2, 3, or 4 compartment)	DRAINBOARD SERIES	DRAINBOARD	BOWL SIZE	DRAINBOARD LENGHT	1 COMP	2 COMP	3 COMP	4 COMP
SL-17	F-SERIES	NO DRAINBOARD	17” x 17”		$1 704	$2 479	$3 444	$4 444
SL-1723	F-SERIES	NO DRAINBOARD	17” x 23”		$1 721	$2 504	$3 479	$4 489
SL-18	F-SERIES	NO DRAINBOARD	18” x 18”		$1 738	$2 529	$3 514	$4 534
SL-1824	F-SERIES	NO DRAINBOARD	18” x 24”		$1 756	$2 554	$3 549	$4 579
SL-23	F-SERIES	NO DRAINBOARD	23” x 23”		$1 773	$2 579	$3 584	$4 625
SL-24	F-SERIES	NO DRAINBOARD	24” x 24”		$1 791	$2 605	$3 620	$4 671
SL-29	F-SERIES	NO DRAINBOARD	29” x 29”		$1 809	$2 631	$3 656	$4 718
SL-2923	F-SERIES	NO DRAINBOARD	29” x 23”		$1 827	$2 658	$3 693	$4 765
SL-1620	F-SERIES	NO DRAINBOARD	16” x 20”		$1 845	$2 684	$3 730	$4 813
SL-2020	F-SERIES	NO DRAINBOARD	20” x 20”		$1 864	$2 711	$3 767	$4 861

SPEC LINE (F-SERIES)

16ga Stainless Sinks / Stainless Steel Legs, Bracing FB, and Adjustable Bullet Feet

MODEL # (1, 2, 3, or 4 compartment)	DRAINBOARD SERIES	DRAINBOARD	BOWL SIZE	DRAINBOARD LENGHT	1 COMP	2 COMP	3 COMP	4 COMP
SL-2028	F-SERIES	NO DRAINBOARD	20” x 28”		$1 882	$2 738	$3 805	$4 909
SL-17-18-F	F-SERIES	RIGHT / LEFT	17” x 17”	18”	$1 779	$2 565	$3 525	$4 548
SL-17-24-F	F-SERIES	RIGHT / LEFT	17” x 17”	24”	$1 797	$2 591	$3 560	$4 594
SL-1723-18-F	F-SERIES	RIGHT / LEFT	17” x 23”	18”	$1 815	$2 617	$3 595	$4 640
SL-1723-24-F	F-SERIES	RIGHT / LEFT	17” x 23”	24”	$1 833	$2 643	$3 631	$4 686
SL-18-18-F	F-SERIES	RIGHT / LEFT	18” x 18”	18”	$1 852	$2 669	$3 668	$4 733
SL-18-24-F	F-SERIES	RIGHT / LEFT	18” x 18”	24”	$1 870	$2 696	$3 704	$4 780
SL-1824-18-F	F-SERIES	RIGHT / LEFT	18” x 24”	18”	$1 889	$2 723	$3 741	$4 828
SL-1824-24-F	F-SERIES	RIGHT / LEFT	18” x 24”	24”	$1 908	$2 750	$3 779	$4 876
SL-23-24-F	F-SERIES	RIGHT / LEFT	23” x 23”	24”	$1 927	$2 778	$3 817	$4 925
SL-23-30-F	F-SERIES	RIGHT / LEFT	23” x 23”	30”	$1 946	$2 805	$3 855	$4 974
SL-24-18-F	F-SERIES	RIGHT / LEFT	24” x 24”	18”	$1 966	$2 833	$3 893	$5 024
SL-24-24-F	F-SERIES	RIGHT / LEFT	24” x 24”	24”	$1 985	$2 862	$3 932	$5 074
SL-24-30-F	F-SERIES	RIGHT / LEFT	24” x 24”	30”				$5 125
SL-2923-30-F	F-SERIES	RIGHT / LEFT	29” x 23”	30”	$2 005	$2 890	$3 972	$5 176
SL-2923-36-F	F-SERIES	RIGHT / LEFT	29” x 23”	36”	$2 025	$2 919	$4 011	$5 228
SL-29-30-F	F-SERIES	RIGHT / LEFT	29” x 29”	30”	$2 045	$2 948	$4 051	$5 281
SL-29-36-F	F-SERIES	RIGHT / LEFT	29” x 29”	36”	$2 066	$2 978	$4 092	$5 333
SL-1620-18-F	F-SERIES	RIGHT / LEFT	16” x 20”	18”	$2 086	$3 008	$4 133	$5 387
SL-2020-20-F	F-SERIES	RIGHT / LEFT	20” x 20”	20”	$2 107	$3 038	$4 174	$5 441
SL-2028-20-F	F-SERIES	RIGHT / LEFT	20” x 28”	20”	$2 128	$3 068	$4 216	$5 495
SL-17-218-F	F-SERIES	DOUBLE	17” x 17”	18”	$1 860	$2 645	$3 600	$4 624
SL-17-224-F	F-SERIES	DOUBLE	17” x 17”	24”	$1 878	$2 672	$3 636	$4 670
SL-1723-218-F	F-SERIES	DOUBLE	17” x 23”	18”	$1 897	$2 698	$3 672	$4 717
SL-1723-224-F	F-SERIES	DOUBLE	17” x 23”	24”	$1 916	$2 725	$3 709	$4 764
SL-18-218-F	F-SERIES	DOUBLE	18” x 18”	18”	$1 935	$2 753	$3 746	$4 811
SL-18-224-F	F-SERIES	DOUBLE	18” x 18”	24”	$1 954	$2 780	$3 783	$4 860
SL-1824-218-F	F-SERIES	DOUBLE	18” x 24”	18”	$1 974	$2 808	$3 821	$4 908
SL-1824-224-F	F-SERIES	DOUBLE	18” x 24”	24”	$1 994	$2 836	$3 860	$4 957
SL-23-224-F	F-SERIES	DOUBLE	23” x 23”	24”	$2 014	$2 864	$3 898	$5 007
SL-23-230-F	F-SERIES	DOUBLE	23” x 23”	30”	$2 034	$2 893	$3 937	$5 057
SL-24-218-F	F-SERIES	DOUBLE	24” x 24”	18”	$2 054	$2 922	$3 976	$5 107
SL-24-224-F	F-SERIES	DOUBLE	24” x 24”	24”	$2 075	$2 951	$4 016	$5 158
SL-2923-230-F	F-SERIES	DOUBLE	29” x 23”	30”	$2 095	$2 981	$4 056	$5 210
SL-2923-236-F	F-SERIES	DOUBLE	29” x 23”	36”	$2 116	$3 010	$4 097	$5 262
SL-29-230-F	F-SERIES	DOUBLE	29” x 29”	30”	$2 137	$3 041	$4 138	$5 315
SL-29-236-F	F-SERIES	DOUBLE	29” x 29”	36”	$2 159	$3 071	$4 179	$5 368
SL-1620-218-F	F-SERIES	DOUBLE	16” x 20”	18”	$2 180	$3 102	$4 221	$5 422
SL-2020-220-F	F-SERIES	DOUBLE	20” x 20”	20”	$2 202	$3 133	$4 263	$5 476
SL-2028-220-F	F-SERIES	DOUBLE	20” x 28”	20”	$2 224	$3 164	$4 306	$5 531
SL-3-LC-12-212-F	F-SERIES	CORNER	12” x 12”	12”			$3 542	
SL-3-LC-12-218-F	F-SERIES	CORNER	12” x 12”	18”			$3 577	
SL-3-LC-12-220-F	F-SERIES	CORNER	12” x 12”	20”			$3 613	
SL-3-LC-12-224-F	F-SERIES	CORNER	12” x 12”	24”			$3 649	

SINKS / **COMPARTMENT SINKS**

SPEC LINE (F-SERIES)
14ga Stainless Sinks / Stainless Steel Legs , Bracing FB & R, and Adjustable Bullet Feet

MODEL # (1, 2, 3, or 4 compartment)	DRAINBOARD SERIES	DRAINBOARD	BOWL SIZE	DRAINBOARD LENGHT	1 COMP	2 COMP	3 COMP	4 COMP
SL-3-LC-17-218-F	F-SERIES	CORNER	17” x 17”	18”			$3 686	
SL-3-LC-20-220-F	F-SERIES	CORNER	20” x 20”	20”			$3 722	
SL-3-LC-23-224-F	F-SERIES	CORNER	23” x 23”	24”			$3 760	
SS-SL-3-1014-212-F	F-SERIES	SPACE SAVER	10” x 14”	12”			$2 771	
SS-SL-3-1014-218-F	F-SERIES	SPACE SAVER	10” x 14”	18”			$2 799	
SS-SL-3-16-216-F	F-SERIES	SPACE SAVER	16” x 16”	16”			$2 827	
SS-SL-4-1014-212-F	F-SERIES	SPACE SAVER	10” x 14”	12”				$3 345
SS-SL-4-1014-218-F	F-SERIES	SPACE SAVER	10” x 14”	18”				$3 379
SS-SL-4-1517-215-F	F-SERIES	SPACE SAVER	15” x 17”	15”				$3 413
SS-SL-4-1619-215-F	F-SERIES	SPACE SAVER	16” x 19”	15”				$3 447

SPEC LINE (P-SERIES)
14ga Stainless Sinks / Stainless Steel Legs , Bracing FB & R, and Adjustable Bullet Feet

MODEL # (1, 2, 3, or 4 compartment)	DRAINBOARD SERIES	DRAINBOARD	BOWL SIZE	DRAINBOARD LENGHT	1 COMP	2 COMP	3 COMP	4 COMP
SL-17-18-P	P-SERIES	RIGHT / LEFT	17” x 17”	18”	$1 824	$2 629	$3 613	$4 662
SL-17-24-P	P-SERIES	RIGHT / LEFT	17” x 17”	24”	$1 842	$2 655	$3 649	$4 709
SL-1723-18-P	P-SERIES	RIGHT / LEFT	17” x 23”	18”	$1 861	$2 682	$3 685	$4 756
SL-1723-24-P	P-SERIES	RIGHT / LEFT	17” x 23”	24”	$1 879	$2 709	$3 722	$4 803
SL-18-18-P	P-SERIES	RIGHT / LEFT	18” x 18”	18”	$1 898	$2 736	$3 759	$4 851
SL-18-24-P	P-SERIES	RIGHT / LEFT	18” x 18”	24”	$1 917	$2 763	$3 797	$4 900
SL-1824-18-P	P-SERIES	RIGHT / LEFT	18” x 24”	18”	$1 936	$2 791	$3 835	$4 949
SL-1824-24-P	P-SERIES	RIGHT / LEFT	18” x 24”	24”	$1 955	$2 819	$3 873	$4 998
SL-23-24-P	P-SERIES	RIGHT / LEFT	23” x 23”	24”	$1 975	$2 847	$3 912	$5 048
SL-23-30-P	P-SERIES	RIGHT / LEFT	23” x 23”	30”	$1 995	$2 875	$3 951	$5 099
SL-24-18-P	P-SERIES	RIGHT / LEFT	24” x 24”	18”	$2 015	$2 904	$3 991	$5 150
SL-24-24-P	P-SERIES	RIGHT / LEFT	24” x 24”	24”	$2 035	$2 933	$4 031	$5 201
SL-24-30-P	P-SERIES	RIGHT / LEFT	24” x 24”	30”				$5 253
SL-2923-30-P	P-SERIES	RIGHT / LEFT	29” x 23”	30”	$2 055	$2 963	$4 071	$5 306
SL-2923-36-P	P-SERIES	RIGHT / LEFT	29” x 23”	36”	$2 076	$2 992	$4 112	$5 359
SL-29-30-P	P-SERIES	RIGHT / LEFT	29” x 29”	30”	$2 097	$3 022	$4 153	$5 413
SL-29-36-P	P-SERIES	RIGHT / LEFT	29” x 29”	36”	$2 117	$3 052	$4 194	$5 467
SL-1620-18-P	P-SERIES	RIGHT / LEFT	16” x 20”	18”	$2 139	$3 083	$4 236	$5 521
SL-2020-20-P	P-SERIES	RIGHT / LEFT	20” x 20”	20”	$2 160	$3 114	$4 279	$5 577
SL-2028-20-P	P-SERIES	RIGHT / LEFT	20” x 28”	20”	$2 182	$3 145	$4 321	$5 632
SL-17-218-P	P-SERIES	DOUBLE	17” x 17”	18”	$1 906	$2 711	$3 690	$4 739
SL-17-224-P	P-SERIES	DOUBLE	17” x 17”	24”	$1 925	$2 738	$3 727	$4 787
SL-1723-218-P	P-SERIES	DOUBLE	17” x 23”	18”	$1 944	$2 766	$3 764	$4 835
SL-1723-224-P	P-SERIES	DOUBLE	17” x 23”	24”	$1 964	$2 793	$3 802	$4 883
SL-18-218-P	P-SERIES	DOUBLE	18” x 18”	18”	$1 983	$2 821	$3 840	$4 932
SL-18-224-P	P-SERIES	DOUBLE	18” x 18”	24”	$2 003	$2 850	$3 878	$4 981
SL-1824-218-P	P-SERIES	DOUBLE	18” x 24”	18”	$2 023	$2 878	$3 917	$5 031

SPEC LINE (P-SERIES)
14ga Stainless Sinks / Stainless Steel Legs , Bracing FB & R, and Adjustable Bullet Feet

MODEL # (1, 2, 3, or 4 compartment)	DRAINBOARD SERIES	DRAINBOARD	BOWL SIZE	DRAINBOARD LENGHT	1 COMP	2 COMP	3 COMP	4 COMP
SL-1824-224-P	P-SERIES	DOUBLE	18” x 24”	24”	$2 044	$2 907	$3 956	$5 081
SL-23-224-P	P-SERIES	DOUBLE	23” x 23”	24”	$2 064	$2 936	$3 996	$5 132
SL-23-230-P	P-SERIES	DOUBLE	23” x 23”	30”	$2 085	$2 965	$4 036	$5 183
SL-24-218-P	P-SERIES	DOUBLE	24” x 24”	18”	$2 105	$2 995	$4 076	$5 235
SL-24-224-P	P-SERIES	DOUBLE	24” x 24”	24”	$2 126	$3 025	$4 117	$5 287
SL-2923-230-P	P-SERIES	DOUBLE	29” x 23”	30”	$2 148	$3 055	$4 158	$5 340
SL-2923-236-P	P-SERIES	DOUBLE	29” x 23”	36”	$2 169	$3 086	$4 199	$5 394
SL-29-230-P	P-SERIES	DOUBLE	29” x 29”	30”	$2 191	$3 117	$4 241	$5 448
SL-29-236-P	P-SERIES	DOUBLE	29” x 29”	36”	$2 213	$3 148	$4 284	$5 502
SL-1620-218-P	P-SERIES	DOUBLE	16” x 20”	18”	$2 235	$3 179	$4 327	$5 557
SL-2020-220-P	P-SERIES	DOUBLE	20” x 20”	20”	$2 257	$3 211	$4 370	$5 613
SL-2028-220-P	P-SERIES	DOUBLE	20” x 28”	20”	$2 280	$3 243	$4 414	$5 669
SL-3-LC-12-212-P	P-SERIES	CORNER	12” x 12”	12”			$3 542	
SL-3-LC-12-218-P	P-SERIES	CORNER	12” x 12”	18”			$3 577	
SL-3-LC-12-220-P	P-SERIES	CORNER	12” x 12”	20”			$3 613	
SL-3-LC-12-224-P	P-SERIES	CORNER	12” x 12”	24”			$3 649	
SL-3-LC-17-218-P	P-SERIES	CORNER	17” x 17”	18”			$3 686	
SL-3-LC-20-220-P	P-SERIES	CORNER	20” x 20”	20”			$3 722	
SL-3-LC-23-224-P	P-SERIES	CORNER	23” x 23”	24”			$3 760	
SS-SL-3-1014-212-P	P-SERIES	SPACE SAVER	10” x 14”	12”			$1 003	
SS-SL-3-1014-218-P	P-SERIES	SPACE SAVER	10” x 14”	18”			$1 182	
SS-SL-3-16-216-P	P-SERIES	SPACE SAVER	16” x 16”	16”			$1 194	
SS-SL-4-1014-212-P	P-SERIES	SPACE SAVER	10” x 14”	12”				$1 447
SS-SL-4-1014-218-P	P-SERIES	SPACE SAVER	10” x 14”	18”				$1 462
SS-SL-4-1517-215-P	P-SERIES	SPACE SAVER	15” x 17”	15”				$1 476
SS-SL-4-1619-215-P	P-SERIES	SPACE SAVER	16” x 19”	15”				$1 491

SPEC LINE (C-SERIES)
14ga Stainless Sinks / Stainless Steel Legs , Bracing FB & R, and Adjustable Bullet Feet

MODEL # (1, 2, 3, or 4 compartment)	DRAINBOARD SERIES	DRAINBOARD	BOWL SIZE	DRAINBOARD LENGHT	1 COMP	2 COMP	3 COMP	4 COMP
SL-17-18-C	C-SERIES	RIGHT / LEFT	17” x 17”	18”	$1 915	$2 761	$3 793	$4 895
SL-17-24-C	C-SERIES	RIGHT / LEFT	17” x 17”	24”	$1 934	$2 788	$3 831	$4 944
SL-1723-18-C	C-SERIES	RIGHT / LEFT	17” x 23”	18”	$1 954	$2 816	$3 870	$4 994
SL-1723-24-C	C-SERIES	RIGHT / LEFT	17” x 23”	24”	$1 973	$2 844	$3 908	$5 044
SL-18-18-C	C-SERIES	RIGHT / LEFT	18” x 18”	18”	$1 993	$2 873	$3 947	$5 094
SL-18-24-C	C-SERIES	RIGHT / LEFT	18” x 18”	24”	$2 013	$2 901	$3 987	$5 145
SL-1824-18-C	C-SERIES	RIGHT / LEFT	18” x 24”	18”	$2 033	$2 930	$4 027	$5 196
SL-1824-24-C	C-SERIES	RIGHT / LEFT	18” x 24”	24”	$2 053	$2 960	$4 067	$5 248
SL-23-24-C	C-SERIES	RIGHT / LEFT	23” x 23”	24”	$2 074	$2 989	$4 108	$5 301
SL-23-30-C	C-SERIES	RIGHT / LEFT	23” x 23”	30”	$2 094	$3 019	$4 149	$5 354
SL-24-18-C	C-SERIES	RIGHT / LEFT	24” x 24”	18”	$2 115	$3 049	$4 190	$5 407
SL-24-24-C	C-SERIES	RIGHT / LEFT	24” x 24”	24”	$2 137	$3 080	$4 232	$5 461
SL-24-30-C	C-SERIES	RIGHT / LEFT	24” x 24”	30”				$5 516

SINKS / **COMPARTMENT SINKS**

QUALITY LINE (C-SERIES)

16ga Stainless Sinks / Stainless Steel Legs, Bracing FB, and Adjustable Bullet Feet

MODEL # (1, 2, 3, or 4 compartment)	DRAINBOARD SERIES	DRAINBOARD	BOWL SIZE	DRAINBOARD LENGHT	1 COMP	2 COMP	3 COMP	4 COMP
SL-2923-30-C	C-SERIES	RIGHT / LEFT	29” x 23”	30”	$2 158	$3 111	$4 274	$5 571
SL-2923-36-C	C-SERIES	RIGHT / LEFT	29” x 23”	36”	$2 180	$3 142	$4 317	$5 627
SL-29-30-C	C-SERIES	RIGHT / LEFT	29” x 29”	30”	$2 201	$3 173	$4 360	$5 683
SL-29-36-C	C-SERIES	RIGHT / LEFT	29” x 29”	36”	$2 223	$3 205	$4 404	$5 740
SL-1620-18-C	C-SERIES	RIGHT / LEFT	16” x 20”	18”	$2 246	$3 237	$4 448	$5 797
SL-2020-20-C	C-SERIES	RIGHT / LEFT	20” x 20”	20”	$2 268	$3 269	$4 492	$5 855
SL-2028-20-C	C-SERIES	RIGHT / LEFT	20” x 28”	20”	$2 291	$3 302	$4 537	$5 914
SL-17-218-C	C-SERIES	DOUBLE	17” x 17”	18”	$2 001	$2 847	$3 874	$4 976
SL-17-224-C	C-SERIES	DOUBLE	17” x 17”	24”	$2 021	$2 875	$3 913	$5 026
SL-1723-218-C	C-SERIES	DOUBLE	17” x 23”	18”	$2 042	$2 904	$3 952	$5 076
SL-1723-224-C	C-SERIES	DOUBLE	17” x 23”	24”	$2 062	$2 933	$3 992	$5 127
SL-18-218-C	C-SERIES	DOUBLE	18” x 18”	18”	$2 083	$2 962	$4 032	$5 178
SL-18-224-C	C-SERIES	DOUBLE	18” x 18”	24”	$2 103	$2 992	$4 072	$5 230
SL-1824-218-C	C-SERIES	DOUBLE	18” x 24”	18”	$2 124	$3 022	$4 113	$5 282
SL-1824-224-C	C-SERIES	DOUBLE	18” x 24”	24”	$2 146	$3 052	$4 154	$5 335
SL-23-224-C	C-SERIES	DOUBLE	23” x 23”	24”	$2 167	$3 083	$4 195	$5 389
SL-23-230-C	C-SERIES	DOUBLE	23” x 23”	30”	$2 189	$3 114	$4 237	$5 442
SL-24-218-C	C-SERIES	DOUBLE	24” x 24”	18”	$2 211	$3 145	$4 280	$5 497
SL-24-224-C	C-SERIES	DOUBLE	24” x 24”	24”	$2 233	$3 176	$4 322	$5 552
SL-2923-230-C	C-SERIES	DOUBLE	29” x 23”	30”	$2 255	$3 208	$4 366	$5 607
SL-2923-236-C	C-SERIES	DOUBLE	29” x 23”	36”	$2 278	$3 240	$4 409	$5 663
SL-29-230-C	C-SERIES	DOUBLE	29” x 29”	30”	$2 300	$3 272	$4 453	$5 720
SL-29-236-C	C-SERIES	DOUBLE	29” x 29”	36”	$2 323	$3 305	$4 498	$5 777
SL-1620-218-C	C-SERIES	DOUBLE	16” x 20”	18”	$2 347	$3 338	$4 543	$5 835
SL-2020-220-C	C-SERIES	DOUBLE	20” x 20”	20”	$2 370	$3 372	$4 588	$5 893
SL-2028-220-C	C-SERIES	DOUBLE	20” x 28”	20”	$2 394	$3 405	$4 634	$5 952
SL-3-LC-12-212-C	C-SERIES	CORNER	12” x 12”	12”			$3 811,76	
SL-3-LC-12-218-C	C-SERIES	CORNER	12” x 12”	18”			$3 849,88	
SL-3-LC-12-220-C	C-SERIES	CORNER	12” x 12”	20”			$3 888,38	
SL-3-LC-12-224-C	C-SERIES	CORNER	12” x 12”	24”			$3 927,26	
SL-3-LC-17-218-C	C-SERIES	CORNER	17” x 17”	18”			$3 966,53	
SL-3-LC-20-220-C	C-SERIES	CORNER	20” x 20”	20”			$4 006,20	
SL-3-LC-23-224-C	C-SERIES	CORNER	23” x 23”	24”			$4 046,26	
SS-SL-3-1014-212-C	C-SERIES	SPACE SAVER	10” x 14”	12”			$2 982,62	
SS-SL-3-1014-218-C	C-SERIES	SPACE SAVER	10” x 14”	18”			$3 012,44	
SS-SL-3-16-216-C	C-SERIES	SPACE SAVER	16” x 16”	16”			$3 042,57	
SS-SL-4-1014-212-C	C-SERIES	SPACE SAVER	10” x 14”	12”				$3 536,50
SS-SL-4-1014-218-C	C-SERIES	SPACE SAVER	10” x 14”	18”				$3 571,87
SS-SL-4-1517-215-C	C-SERIES	SPACE SAVER	15” x 17”	15”				$3 607,59
SS-SL-4-1619-215-C	C-SERIES	SPACE SAVER	16” x 19”	15”				$3 643,66

SPEC LINE (S-SERIES)

14ga Stainless Sinks / Stainless Steel Legs , Bracing FB & R, and Adjustable Bullet Feet

MODEL # (1, 2, 3, or 4 compartment)	DRAINBOARD SERIES	DRAINBOARD	BOWL SIZE	DRAINBOARD LENGHT	1 COMP	2 COMP	3 COMP	4 COMP
SL-17-18-S	S-SERIES	RIGHT / LEFT	17” x 17”	18”	$2 107	$3 037	$4 173	$5 385
SL-17-24-S	S-SERIES	RIGHT / LEFT	17” x 17”	24”	$2 128	$3 067	$4 214	$5 439
SL-1723-18-S	S-SERIES	RIGHT / LEFT	17” x 23”	18”	$2 149	$3 098	$4 257	$5 493
SL-1723-24-S	S-SERIES	RIGHT / LEFT	17” x 23”	24”	$2 170	$3 129	$4 299	$5 548
SL-18-18-S	S-SERIES	RIGHT / LEFT	18” x 18”	18”	$2 192	$3 160	$4 342	$5 603
SL-18-24-S	S-SERIES	RIGHT / LEFT	18” x 18”	24”	$2 214	$3 192	$4 386	$5 659
SL-1824-18-S	S-SERIES	RIGHT / LEFT	18” x 24”	18”	$2 236	$3 223	$4 429	$5 716
SL-1824-24-S	S-SERIES	RIGHT / LEFT	18” x 24”	24”	$2 259	$3 256	$4 474	$5 773
SL-23-24-S	S-SERIES	RIGHT / LEFT	23” x 23”	24”	$2 281	$3 288	$4 518	$5 831
SL-23-30-S	S-SERIES	RIGHT / LEFT	23” x 23”	30”	$2 304	$3 321	$4 564	$5 889
SL-24-18-S	S-SERIES	RIGHT / LEFT	24” x 24”	18”	$2 327	$3 354	$4 609	$5 948
SL-24-24-S	S-SERIES	RIGHT / LEFT	24” x 24”	24”	$2 350	$3 388	$4 655	$6 008
SL-24-30-S	S-SERIES	RIGHT / LEFT	24” x 24”	30”				$6 068
SL-2923-30-S	S-SERIES	RIGHT / LEFT	29” x 23”	30”	$2 374	$3 422	$4 702	$6 128
SL-2923-36-S	S-SERIES	RIGHT / LEFT	29” x 23”	36”	$2 397	$3 456	$4 749	$6 190
SL-29-30-S	S-SERIES	RIGHT / LEFT	29” x 29”	36”	$2 421	$3 491	$4 796	$6 251
SL-29-36-S	S-SERIES	RIGHT / LEFT	29” x 29”	36”	$2 446	$3 525	$4 844	$6 314
SL-1620-18-S	S-SERIES	RIGHT / LEFT	16” x 20”	18”	$2 470	$3 561	$4 893	$6 377
SL-2020-20-S	S-SERIES	RIGHT / LEFT	20” x 20”	20”	$2 495	$3 596	$4 942	$6 441
SL-2028-20-S	S-SERIES	RIGHT / LEFT	20” x 28”	20”	$2 520	$3 632	$4 991	$6 505
SL-17-218-S	S-SERIES	DOUBLE	17” x 17”	18”	$2 201	$3 132	$4 262	$5 474
SL-17-224-S	S-SERIES	DOUBLE	17” x 17”	24”	$2 223	$3 163	$4 304	$5 529
SL-1723-218-S	S-SERIES	DOUBLE	17” x 23”	18”	$2 246	$3 194	$4 347	$5 584
SL-1723-224-S	S-SERIES	DOUBLE	17” x 23”	24”	$2 268	$3 226	$4 391	$5 640
SL-18-218-S	S-SERIES	DOUBLE	18” x 18”	18”	$2 291	$3 259	$4 435	$5 696
SL-18-224-S	S-SERIES	DOUBLE	18” x 18”	24”	$2 314	$3 291	$4 479	$5 753
SL-1824-218-S	S-SERIES	DOUBLE	18” x 24”	18”	$2 337	$3 324	$4 524	$5 811
SL-1824-224-S	S-SERIES	DOUBLE	18” x 24”	24”	$2 360	$3 357	$4 569	$5 869
SL-23-224-S	S-SERIES	DOUBLE	23” x 23”	24”	$2 384	$3 391	$4 615	$5 927
SL-23-230-S	S-SERIES	DOUBLE	23” x 23”	30”	$2 408	$3 425	$4 661	$5 987
SL-24-218-S	S-SERIES	DOUBLE	24” x 24”	18”	$2 432	$3 459	$4 708	$6 047
SL-24-224-S	S-SERIES	DOUBLE	24” x 24”	24”	$2 456	$3 494	$4 755	$6 107
SL-2923-230-S	S-SERIES	DOUBLE	29” x 23”	30”	$2 481	$3 529	$4 802	$6 168
SL-2923-236-S	S-SERIES	DOUBLE	29” x 23”	36”	$2 505	$3 564	$4 850	$6 230
SL-29-230-S	S-SERIES	DOUBLE	29” x 29”	30”	$2 531	$3 600	$4 899	$6 292
SL-29-236-S	S-SERIES	DOUBLE	29” x 29”	36”	$2 556	$3 636	$4 948	$6 355
SL-1620-218-S	S-SERIES	DOUBLE	16” x 20”	18”	$2 581	$3 672	$4 997	$6 418
SL-2020-220-S	S-SERIES	DOUBLE	20” x 20”	20”	$2 607	$3 709	$5 047	$6 483
SL-2028-220-S	S-SERIES	DOUBLE	20” x 28”	20”	$2 633	$3 746	$5 098	$6 548
SL-3-LC-12-212-S	S-SERIES	CORNER	12” x 12”	12”			$4 193	
SL-3-LC-12-218-S	S-SERIES	CORNER	12” x 12”	18”			$4 235	
SL-3-LC-12-220-S	S-SERIES	CORNER	12” x 12”	20”			$4 277	

SINKS / **COMPARTMENT SINKS**

SPEC LINE (S-SERIES) 14ga Stainless Sinks / Stainless Steel Legs , Bracing FB & R, and Adjustable Bullet Feet								
MODEL # (1, 2, 3, or 4 compartment)	DRAINBOARD SERIES	DRAINBOARD	BOWL SIZE	DRAINBOARD LENGHT	1 COMP	2 COMP	3 COMP	4 COMP
SL-3-LC-12-224-S	S-SERIES	CORNER	12” x 12”	24”			$4 320	
SL-3-LC-17-218-S	S-SERIES	CORNER	17” x 17”	18”			$4 363	
SL-3-LC-20-220-S	S-SERIES	CORNER	20” x 20”	20”			$4 407	
SL-3-LC-23-224-S	S-SERIES	CORNER	23” x 23”	24”			$4 451	
SS-SL-3-1014-212-S	S-SERIES	SPACE SAVER	10” x 14”	12”			$3 281	
SS-SL-3-1014-218-S	S-SERIES	SPACE SAVER	10” x 14”	18”			$3 314	
SS-SL-3-16-216-S	S-SERIES	SPACE SAVER	16” x 16”	16”			$3 347	
SS-SL-4-1014-212-S	S-SERIES	SPACE SAVER	10” x 14”	12”				$3 890
SS-SL-4-1014-218-S	S-SERIES	SPACE SAVER	10” x 14”	18”				$3 929
SS-SL-4-1517-215-S	S-SERIES	SPACE SAVER	15” x 17”	15”				$3 968
SS-SL-4-1619-215-S	S-SERIES	SPACE SAVER	16” x 19”	15”				$4 008

SINKS / **INTEGRAL COMPARTMENT SINKS**

LAMBERTSON, CONSULTANT SPEC:
Institutional Applications (Schools, Prisons, Hospitals)

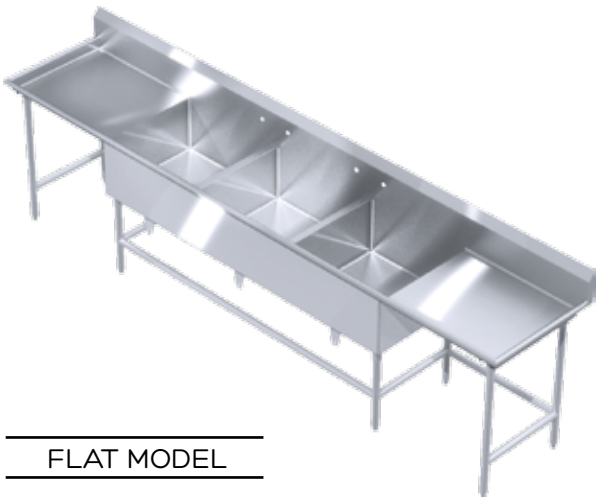

FLAT MODEL

SINKS-CL(FS) 14ga Compartment Sink with Double Drainboard-Integral Flat			
MODEL #	BOWL: L x W x D	DESCRIPTION	PRICE
CL-2-2026-220-FS	20” x 26” x 15”	Integral 2-Compartment	$6 757
CL-2-2226-222-FS	22” x 26” x 15”	Integral 2-Compartment	$7 095
CL-2-2426-224-FS	24” x 26” x 15”	Integral 2-Compartment	$7 450
CL-2-2626-226-FS	26” x 26” x 15”	Integral 2-Compartment	$7 822
CL-2-2826-228-FS	28” x 26” x 15”	Integral 2-Compartment	$8 214
CL-2-3026-230-FS	30” x 26” x 15”	Integral 2-Compartment	$8 624
CL-3-2026-220-FS	20” x 26” x 15”	Integral 3-Compartment	$7 214
CL-3-2226-222-FS	22” x 26” x 15”	Integral 3-Compartment	$7 574
CL-3-2426-224-FS	24” x 26” x 15”	Integral 3-Compartment	$7 953
CL-3-2626-226-FS	26” x 26” x 15”	Integral 3-Compartment	$8 351
CL-3-2826-228-FS	28” x 26” x 15”	Integral 3-Compartment	$8 768
CL-3-3026-230-FS	30” x 26” x 15”	Integral 3-Compartment	$9 207
CL-4-2026-220-FS	20” x 26” x 15”	Integral 4-Compartment	$7 801
CL-4-2226-222-FS	22” x 26” x 15”	Integral 4-Compartment	$8 191
CL-4-2426-224-FS	24” x 26” x 15”	Integral 4-Compartment	$8 600
CL-4-2626-226-FS	26” x 26” x 15”	Integral 4-Compartment	$9 030
CL-4-2826-228-FS	28” x 26” x 15”	Integral 4-Compartment	$9 482
CL-4-3026-230-FS	30” x 26” x 15”	Integral 4-Compartment	$9 956

SINKS / **INTEGRAL COMPARTMENT SINKS**

LAMBERTSON, CONSULTANT SPEC:
Institutional Applications (Schools, Prisons, Hospitals)

CDZ MODEL

SINKS-CL(CS) 14ga Compartment Sink with Double Drainboard-Integral CDZ			
MODEL #	BOWL: L x W x D	DESCRIPTION	PRICE
CL-2-2026-220-CS	20” x 26” x 15”	Integral 2-Compartment	$7 771
CL-2-2226-222-CS	22” x 26” x 15”	Integral 2-Compartment	$8 159
CL-2-2426-224-CS	24” x 26” x 15”	Integral 2-Compartment	$8 567
CL-2-2626-226-CS	26” x 26” x 15”	Integral 2-Compartment	$8 996
CL-2-2826-228-CS	28” x 26” x 15”	Integral 2-Compartment	$9 446
CL-2-3026-230-CS	30” x 26” x 15”	Integral 2-Compartment	$9 918
CL-3-2026-220-CS	20” x 26” x 15”	Integral 3-Compartment	$8 296
CL-3-2226-222-CS	22” x 26” x 15”	Integral 3-Compartment	$8 710
CL-3-2426-224-CS	24” x 26” x 15”	Integral 3-Compartment	$9 146
CL-3-2626-226-CS	26” x 26” x 15”	Integral 3-Compartment	$9 603
CL-3-2826-228-CS	28” x 26” x 15”	Integral 3-Compartment	$10 083
CL-3-3026-230-CS	30” x 26” x 15”	Integral 3-Compartment	$10 588
CL-4-2026-220-CS	20” x 26” x 15”	Integral 4-Compartment	$8 971
CL-4-2226-222-CS	22” x 26” x 15”	Integral 4-Compartment	$9 419
CL-4-2426-224-CS	24” x 26” x 15”	Integral 4-Compartment	$9 890
CL-4-2626-226-CS	26” x 26” x 15”	Integral 4-Compartment	$10 385
CL-4-2826-228-CS	28” x 26” x 15”	Integral 4-Compartment	$10 904
CL-4-3026-230-CS	30” x 26” x 15”	Integral 4-Compartment	$11 449

SINKS / **MOP SINKS**

FEATURE: Removable Front Access Panel

MOP SINK 16ga		
MODEL #	BOWL: L x W x D	PRICE
MS-1612-10-16	16” x 12” x 10”	$1 537
MS-1612-12-16	16” x 12” x 12”	$1 605
MS-2016-10-16	20” x 16” x 10”	$1 813
MS-2016-12-16	20” x 16” x 12”	$1 843
MS-2420-10-16	24” x 20” x 10”	$2 145
MS-2420-12-16	24” x 20” x 12”	$2 211

MOP SINK 14ga		
MODEL #	BOWL: L x W x D	PRICE
MS-1612-10-14	16” x 12” x 10”	$1 592
MS-1612-12-14	16” x 12” x 12”	$1 662
MS-2016-10-14	20” x 16” x 10”	$1 890
MS-2016-12-14	20” x 16” x 12”	$1 924
MS-2420-10-14	24” x 20” x 10”	$2 247
MS-2420-12-14	24” x 20” x 12”	$2 318

SINKS /
MULTI-USERS SINKS

TYPES: SQUARE / SQUARE 45° / RADIUS

SQUARE MODEL

MULTI-USERS SINKS
16ga Wall Mount

MODEL #	BOWL: L x W x D	DESCRIPTION	PRICE
MUS-4820-8-16	48” x 20” x 8”	Square	$1 259
MUS-4820-12-16	48” x 20” x 12”	Square	$1 463
MUS-6020-8-16	60” x 20” x 8”	Square	$1 318
MUS-6020-12-16	60” x 20” x 12”	Square	$1 534
MUS-7220-8-16	72” x 20” x 8”	Square	$1 377
MUS-7220-12-16	72” x 20” x 12”	Square	$1 599
MUS-8420-8-16	84” x 20” x 8”	Square	$1 436
MUS-8420-12-16	84” x 20” x 12”	Square	$1 673
MUS-9620-8-16	96” x 20” x 8”	Square	$1 496
MUS-9620-12-16	96” x 20” x 12”	Square	$1 742
MUS45-4820-8-16	48” x 20” x 8”	Square 45°	$1 510
MUS45-4820-12-16	48” x 20” x 12”	Square 45°	$1 755
MUS45-6020-8-16	60” x 20” x 8”	Square 45°	$1 581
MUS45-6020-12-16	60” x 20” x 12”	Square 45°	$1 841
MUS45-7220-8-16	72” x 20” x 8”	Square 45°	$1 652
MUS45-7220-12-16	72” x 20” x 12”	Square 45°	$1 919
MUS45-8420-8-16	84” x 20” x 8”	Square 45°	$1 724
MUS45-8420-12-16	84” x 20” x 12”	Square 45°	$2 007
MUS45-9620-8-16	96” x 20” x 8”	Square 45°	$1 795
MUS45-9620-12-16	96” x 20” x 12”	Square 45°	$2 091
MUS-4820-8-16-R	48” x 20” x 8”	Radius	$2 730
MUS-4820-12-16-R	48” x 20” x 12”	Radius	$2 992
MUS-6020-8-16-R	60” x 20” x 8”	Radius	$2 977
MUS-6020-12-16-R	60” x 20” x 12”	Radius	$3 261
MUS-7220-8-16-R	72” x 20” x 8”	Radius	$3 224
MUS-7220-12-16-R	72” x 20” x 12”	Radius	$3 523
MUS-8420-8-16-R	84” x 20” x 8”	Radius	$3 471
MUS-8420-12-16-R	84” x 20” x 12”	Radius	$3 794
MUS-9620-8-16-R	96” x 20” x 8”	Radius	$3 718
MUS-9620-12-16-R	96” x 20” x 12”	Radius	$4 061

MULTI-USERS SINKS
14ga Wall Mount

MODEL #	BOWL: L x W x D	DESCRIPTION	PRICE
MUS-4820-8-14	48” x 20” x 8”	Square	$1 328
MUS-4820-12-14	48” x 20” x 12”	Square	$1 546
MUS-6020-8-14	60” x 20” x 8”	Square	$1 401
MUS-6020-12-14	60” x 20” x 12”	Square	$1 634
MUS-7220-8-14	72” x 20” x 8”	Square	$1 474
MUS-7220-12-14	72” x 20” x 12”	Square	$1 715
MUS-8420-8-14	84” x 20” x 8”	Square	$1 547
MUS-8420-12-14	84” x 20” x 12”	Square	$1 805
MUS-9620-8-14	96” x 20” x 8”	Square	$1 620
MUS-9620-12-14	96” x 20” x 12”	Square	$1 891
MUS45-4820-8-14	48” x 20” x 8”	Square 45°	$1 593
MUS45-4820-12-14	48” x 20” x 12”	Square 45°	$1 855
MUS45-6020-8-14	60” x 20” x 8”	Square 45°	$1 681
MUS45-6020-12-14	60” x 20” x 12”	Square 45°	$1 961
MUS45-7220-8-14	72” x 20” x 8”	Square 45°	$1 768
MUS45-7220-12-14	72” x 20” x 12”	Square 45°	$2 058
MUS45-8420-8-14	84” x 20” x 8”	Square 45°	$1 856
MUS45-8420-12-14	84” x 20” x 12”	Square 45°	$2 166
MUS45-9620-8-14	96” x 20” x 8”	Square 45°	$1 944
MUS45-9620-12-14	96” x 20” x 12”	Square 45°	$2 269
MUS-4820-8-14-R	48” x 20” x 8”	Radius	$2 850
MUS-4820-12-14-R	48” x 20” x 12”	Radius	$3 140
MUS-6020-8-14-R	60” x 20” x 8”	Radius	$3 121
MUS-6020-12-14-R	60” x 20” x 12”	Radius	$3 439
MUS-7220-8-14-R	72” x 20” x 8”	Radius	$3 393
MUS-7220-12-14-R	72” x 20” x 12”	Radius	$3 729
MUS-8420-8-14-R	84” x 20” x 8”	Radius	$3 664
MUS-8420-12-14-R	84” x 20” x 12”	Radius	$4 030
MUS-9620-8-14-R	96” x 20” x 8”	Radius	$3 936
MUS-9620-12-14-R	96” x 20” x 12”	Radius	$4 327

SINKS / **HAND SINKS**

HS-9-S-F

HS-9-SL-F

HS-9-SR-F

HSKV-16

HSFV-19

HAND SINKS 16ga Wall Mount		
MODEL #	DESCRIPTION	PRICE
HS-9-D	Deck Mount	$930
HS-9-DR	Deck Mount	$989
HS-9-DL	Deck Mount	$989
HS-9-D2	Deck Mount	$1 049
HS-9-D-F	Deck Mount / Faucets	$1 108
HS-9-DR-F	Deck Mount / Faucets	$1 168
HS-9-DL-F	Deck Mount / Faucets	$1 168
HS-9-D2-F	Deck Mount / Faucets	$1 227
HS-9-S	Splash Mount	$930
HS-9-SR	Splash Mount	$989
HS-9-SL	Splash Mount	$989
HS-9-S2	Splash Mount	$1 049
HS-9-S-F	Splash Mount / Faucets	$1 108
HS-9-SR-F	Splash Mount / Faucets	$1 168
HS-9-SL-F	Splash Mount / Faucets	$1 168
HS-9-S2-F	Splash Mount / Faucets	$1 227

HAND SINKS 16ga Wall Mount		
MODEL #	DESCRIPTION	PRICE
HSKV-16	Knee Valve	$1 526
HSKV-16R	Knee Valve	$1 586
HSKV-16L	Knee Valve	$1 586
HSKV-162	Knee Valve	$1 645
HSKV-19	Knee Valve	$1 661
HSKV-19R	Knee Valve	$1 721
HSKV-19L	Knee Valve	$1 721
HSKV-192	Knee Valve	$1 780
HSFV-16	Foot Valve	$1 777
HSFV-16R	Foot Valve	$1 837
HSFV-16L	Foot Valve	$1 837
HSFV-162	Foot Valve	$1 896
HSFV-19	Foot Valve	$1 914
HSFV-19R	Foot Valve	$1 974
HSFV-19L	Foot Valve	$1 974
HSFV-192	Foot Valve	$2 033

TABLES

PRODUCT SERIES

STANDARD DESIGN: 90° turn down w/15°, kink on length sides of tables where applicable.

BULLNOSE DESIGN: Rounded bullnose safety edge on the length sides of tables where applicable.

PRODUCT LINE

ECONOMY LINE: 18ga 430 Stainless top / 18ga 430 Stainless C-Channels / Based on Series: 18ga 430 Stainless undershelf w/16ga 304 stainless legs or galvanized undershelf and legs / Galvanized gussets / Plastic adjustable bullet feet.

QUALITY LINE: 16ga 304 Stainless top / 16ga 304 Stainless C-Channels / Based on Series: 18ga 430 Stainless undershelf w/16ga 304 stainless legs or galvanized undershelf and legs / Stainless gussets / Stainless adjustable bullet feet.

SPEC LINE: 14ga 304 Stainless top / 14ga 304 Stainless Hat-Channels / Based on Series: 16ga 304 Stainless undershelf w/16ga 304 stainless legs or galvanized undershelf and legs / Stainless gussets / Stainless adjustable bullet feet.

CONSULTANT LINE: 14ga 304 Stainless top / 14ga 304 Stainless Hat-Channels w/supporting stud bolts / Based on Series: 14ga 304 Stainless undershelf w/16ga 304 stainless legs or galvanized undershelf and legs / Stainless gussets / Stainless adjustable bullet feet.

STANDARD

BULLNOSE

BUILD YOUR WORK TABLE (STANDARD)

(SAMPLE MODEL #)

WT S E KD BSC 30 72

(WT) WORK TABLE

(S) PRODUCT SERIES : STANDARD DESIGN

(E) PRODUCT LINE : ECONOMY

(KD) OPTION : KNOCKDOWN VS. WELDED

(BSC) PRODUCT TYPE : BACKSPLASH STAINLESS CROSSBRACING

(30) SINK WIDTH OVERALL DIMENSION : 30” W

(72) SINK LENGTH OVERALL DIMENSION : 72” L

TABLES / **STANDARD EDGE**

ECONOMY WORK TABLE (WELDED)									
MODEL #	DIMENSIONS	SC	GC	SU	GU	BSC	BGC	BSU	BGU
	Width x Length	Stainless Crossbracing	Galvanized Crossbracing	Stainless Undersheld	Galvanized Undershelf	Backsplash Stainless Crossbracing	Backsplash Galvanized Crossbracing	Backsplash Stainless Undershelf	Backplash Galvanized Undershelf
WTSE-1824	18" x 24"	$993	$823	$1 187	$1 031	$1 272	$1 045	$1 273	$1 121
WTSE-1836	18" x 36"	$1 092	$906	$1 306	$1 134	$1 399	$1 149	$1 400	$1 233
WTSE-1848	18" x 48"	$1 202	$996	$1 437	$1 248	$1 539	$1 264	$1 540	$1 356
WTSE-1860	18" x 60"	$1 322	$1 096	$1 580	$1 372	$1 693	$1 390	$1 694	$1 491
WTSE-1872	18" x 72"	$1 454	$1 205	$1 738	$1 510	$1 862	$1 529	$1 864	$1 641
WTSE-1884	18" x 84"	$1 600	$1 326	$1 912	$1 661	$2 048	$1 682	$2 050	$1 805
WTSE-1896	18" x 96"	$1 759	$1 458	$2 104	$1 827	$2 253	$1 851	$2 255	$1 985
WTSE-18108	18" x 108"	$1 935	$1 604	$2 314	$2 009	$2 478	$2 036	$2 481	$2 184
WTSE-18120	18" x 120"	$2 129	$1 765	$2 545	$2 210	$2 726	$2 239	$2 729	$2 402
WTSE-18132	18" x 132"	$2 342	$1 941	$2 800	$2 431	$2 999	$2 463	$3 002	$2 642
WTSE-18144	18" x 144"	$2 576	$2 135	$3 080	$2 674	$3 299	$2 710	$3 302	$2 906
WTSE-2424	24" x 24"	$1 008	$859	$1 213	$1 104	$1 376	$1 263	$1 303	$1 144
WTSE-2436	24" x 36"	$1 109	$945	$1 334	$1 214	$1 513	$1 390	$1 434	$1 259
WTSE-2448	24" x 48"	$1 220	$1 039	$1 467	$1 336	$1 665	$1 529	$1 577	$1 385
WTSE-2460	24" x 60"	$1 342	$1 143	$1 614	$1 469	$1 831	$1 682	$1 735	$1 523
WTSE-2472	24'' x 72''	$1 476	$1 258	$1 776	$1 616	$2 014	$1 850	$1 908	$1 675
WTSE-2484	24" x 84"	$1 623	$1 383	$1 953	$1 778	$2 216	$2 035	$2 099	$1 843
WTSE-2496	24" x 96"	$1 786	$1 522	$2 148	$1 956	$2 437	$2 238	$2 309	$2 027
WTSE-24108	24" x 108"	$1 964	$1 674	$2 363	$2 151	$2 681	$2 462	$2 540	$2 230
WTSE-24120	24" x 120"	$2 161	$1 841	$2 600	$2 366	$2 949	$2 708	$2 794	$2 453
WTSE-24132	24" x 132"	$2 377	$2 025	$2 860	$2 603	$3 244	$2 979	$3 073	$2 698
WTSE-24144	24" x 144"	$2 614	$2 228	$3 145	$2 863	$3 568	$3 277	$3 380	$2 968
WTSE-3036	30" x 36"	$1 043	$900	$1 306	$1 193	$1 562	$1 283	$1 333	$1 172
WTSE-3048	30" x 48"	$1 147	$990	$1 436	$1 312	$1 718	$1 411	$1 467	$1 289
WTSE-3060	30" x 60"	$1 262	$1 089	$1 580	$1 443	$1 890	$1 552	$1 613	$1 418
WTSE-3072	30" x 72"	$1 388	$1 198	$1 738	$1 587	$2 079	$1 707	$1 775	$1 560
WTSE-3084	30" x 84"	$1 527	$1 317	$1 912	$1 746	$2 287	$1 878	$1 952	$1 716
WTSE-3096	30" x 96"	$1 680	$1 449	$2 103	$1 921	$2 515	$2 066	$2 148	$1 887
WTSE-30108	30" x 108"	$1 848	$1 594	$2 313	$2 113	$2 767	$2 272	$2 362	$2 076
WTSE-30120	30" x 120"	$2 033	$1 753	$2 545	$2 324	$3 044	$2 499	$2 599	$2 284
WTSE-30132	30" x 132"	$2 236	$1 929	$2 799	$2 556	$3 348	$2 749	$2 858	$2 512
WTSE-30144	30" x 144"	$2 460	$2 122	$3 079	$2 812	$3 683	$3 024	$3 144	$2 763
WTSE-3636	36" x 36"	$1 100	$948	$1 363	$1 231	$1 721	$1 387	$1 445	$1 199
WTSE-3648	36" x 48"	$1 210	$1 043	$1 500	$1 354	$1 893	$1 526	$1 589	$1 319
WTSE-3660	36" x 60"	$1 331	$1 147	$1 650	$1 490	$2 083	$1 678	$1 748	$1 451
WTSE-3672	36" x 72"	$1 464	$1 262	$1 815	$1 638	$2 291	$1 846	$1 923	$1 596
WTSE-3684	36" x 84"	$1 610	$1 388	$1 996	$1 802	$2 520	$2 031	$2 115	$1 756
WTSE-3696	36" x 96"	$1 771	$1 526	$2 196	$1 983	$2 772	$2 234	$2 327	$1 932
WTSE-36108	36" x 108"	$1 948	$1 679	$2 415	$2 181	$3 049	$2 457	$2 560	$2 125
WTSE-36120	36" x 120"	$2 143	$1 847	$2 657	$2 399	$3 354	$2 703	$2 816	$2 337
WTSE-36132	36" x 132"	$2 357	$2 032	$2 923	$2 639	$3 689	$2 973	$3 097	$2 571
WTSE-36144	36" x 144"	$2 593	$2 235	$3 215	$2 903	$4 058	$3 271	$3 407	$2 828

TABLES / **STANDARD EDGE**

ECONOMY WORK TABLE (WELDED)

MODEL #	DIMENSIONS	SC	GC	SU	GU	BSC	BGC	BSU	BGU
	Width x Length	Stainless Crossbracing	Galvanized Crossbracing	Stainless Undersheld	Galvanized Undershelf	Backsplash Stainless Crossbracing	Backsplash Galvanized Crossbracing	Backsplash Stainless Undershelf	Backplash Galvanized Undershelf
WTSE-4248	42" x 48"	$1 208	$1 208	$1 496	$1 412	$1 990	$1 591	$1 990	$1 591
WTSE-4260	42" x 60"	$1 329	$1 329	$1 646	$1 553	$2 189	$1 750	$2 189	$1 750
WTSE-4272	42" x 72"	$1 462	$1 462	$1 811	$1 708	$2 407	$1 926	$2 407	$1 926
WTSE-4284	42" x 84"	$1 608	$1 608	$1 992	$1 879	$2 648	$2 118	$2 648	$2 118
WTSE-4296	42" x 96"	$1 769	$1 769	$2 191	$2 067	$2 913	$2 330	$2 913	$2 330
WTSE-42108	42" x 108"	$1 946	$1 946	$2 410	$2 273	$3 204	$2 563	$3 204	$2 563
WTSE-42120	42" x 120"	$2 141	$2 141	$2 651	$2 501	$3 525	$2 819	$3 525	$2 819
WTSE-42132	42" x 132"	$2 355	$2 355	$2 916	$2 751	$3 877	$3 101	$3 877	$3 101
WTSE-42144	42" x 144"	$2 590	$2 590	$3 208	$3 026	$4 265	$3 411	$4 265	$3 411
WTSE-4848	48" x 48"	$1 239	$1 075	$1 594	$1 461	$2 133	$1 696	$2 133	$1 696
WTSE-4860	48" x 60"	$1 363	$1 182	$1 753	$1 607	$2 346	$1 866	$2 346	$1 866
WTSE-4872	48" x 72"	$1 500	$1 300	$1 929	$1 768	$2 580	$2 052	$2 580	$2 052
WTSE-4884	48" x 84"	$1 650	$1 430	$2 121	$1 944	$2 838	$2 257	$2 838	$2 257
WTSE-4896	48" x 96"	$1 815	$1 573	$2 334	$2 139	$3 122	$2 483	$3 122	$2 483
WTSE-48108	48" x 108"	$1 996	$1 731	$2 567	$2 353	$3 434	$2 731	$3 434	$2 731
WTSE-48120	48" x 120"	$2 196	$1 904	$2 824	$2 588	$3 778	$3 005	$3 778	$3 005
WTSE-48132	48" x 132"	$2 415	$2 094	$3 106	$2 847	$4 156	$3 305	$4 156	$3 305
WTSE-48144	48" x 144"	$2 657	$2 303	$3 417	$3 132	$4 571	$3 635	$4 571	$3 635
WTSE-5660	56" x 60"	$2 005	$1 845	$1 996	$1 950	$2 640	$1 884	$2 640	$1 884
WTSE-5672	56" x 72"	$2 205	$2 029	$2 196	$2 144	$2 904	$2 072	$2 904	$2 072
WTSE-5684	56" x 84"	$2 426	$2 232	$2 416	$2 359	$3 195	$2 280	$3 195	$2 280
WTSE-5696	56" x 96"	$2 668	$2 455	$2 657	$2 595	$3 514	$2 508	$3 514	$2 508
WTSE-56108	56" x 108"	$2 935	$2 701	$2 923	$2 854	$3 866	$2 758	$3 866	$2 758
WTSE-56120	56" x 120"	$3 229	$2 971	$3 215	$3 140	$4 252	$3 034	$4 252	$3 034
WTSE-56132	56" x 132"	$3 552	$3 268	$3 537	$3 454	$4 678	$3 338	$4 678	$3 338
WTSE-56144	56" x 144"	$3 907	$3 595	$3 890	$3 799	$5 145	$3 671	$5 145	$3 671

ECONOMY WORK TABLE (KNOCKDOWN)

MODEL #	DIMENSIONS	KD-SC	KD-GC	KD-SU	KD-GU	KD-BSC	KD-BGC	KD-BSU	KD-BGU
	Width x Length	Knock Down Stainless Crossbracing	Knock Down Galvanized Crossbracing	Knock Down Stainless Undershelf	Knock Down Galvanized Undershelf	Knock Down Backsplash Stainless Crossbracing	Knock Down Backsplash Galvanized Crossbracing	Knock Down Backsplash Stainless Undershelf	Knock Down Backsplash Galvanized Undershelf
WTSE-1824	18" x 24"	$946	$814	$1 131	$982	$1 211	$995	$1 212	$1 067
WTSE-1836	18" x 36"	$1 040	$895	$1 244	$1 080	$1 332	$1 094	$1 334	$1 174
WTSE-1848	18" x 48"	$1 145	$984	$1 368	$1 188	$1 466	$1 204	$1 467	$1 291
WTSE-1860	18" x 60"	$1 259	$1 083	$1 505	$1 307	$1 612	$1 324	$1 614	$1 420
WTSE-1872	18" x 72"	$1 385	$1 191	$1 656	$1 438	$1 773	$1 457	$1 775	$1 562
WTSE-1884	18" x 84"	$1 523	$1 310	$1 821	$1 581	$1 951	$1 602	$1 953	$1 719
WTSE-1896	18" x 96"	$1 676	$1 441	$2 003	$1 740	$2 146	$1 763	$2 148	$1 891
WTSE-18108	18" x 108"	$1 843	$1 585	$2 204	$1 914	$2 360	$1 939	$2 363	$2 080
WTSE-18120	18" x 120"	$2 028	$1 744	$2 424	$2 105	$2 597	$2 133	$2 599	$2 288

ECONOMY WORK TABLE (KNOCKDOWN)

MODEL #	DIMENSIONS	KD-SC	KD-GC	KD-SU	KD-GU	KD-BSC	KD-BGC	KD-BSU	KD-BGU
	Width x Length	Knock Down Stainless Crossbracing	Knock Down Galvanized Crossbracing	Knock Down Stainless Undershelf	Knock Down Galvanized Undershelf	Knock Down Backsplash Stainless Crossbracing	Knock Down Backsplash Galvanized Crossbracing	Knock Down Backsplash Stainless Undershelf	Knock Down Backsplash Galvanized Undershelf
WTSE-18132	18" x 132"	$2 230	$1 918	$2 666	$2 315	$2 856	$2 346	$2 859	$2 516
WTSE-18144	18" x 144"	$2 453	$2 110	$2 933	$2 547	$3 142	$2 580	$3 145	$2 768
WTSE-2424	24" x 24"	$960	$818	$1 155	$1 051	$1 310	$1 203	$1 241	$1 090
WTSE-2436	24" x 36"	$1 056	$900	$1 270	$1 156	$1 441	$1 324	$1 365	$1 199
WTSE-2448	24" x 48"	$1 162	$990	$1 398	$1 272	$1 585	$1 456	$1 502	$1 319
WTSE-2460	24" x 60"	$1 278	$1 089	$1 537	$1 399	$1 744	$1 601	$1 652	$1 451
WTSE-2472	24" x 72"	$1 405	$1 198	$1 691	$1 539	$1 918	$1 762	$1 817	$1 596
WTSE-2484	24" x 84"	$1 546	$1 318	$1 860	$1 693	$2 110	$1 938	$1 999	$1 755
WTSE-2496	24" x 96"	$1 701	$1 449	$2 046	$1 862	$2 321	$2 132	$2 199	$1 931
WTSE-24108	24" x 108"	$1 871	$1 594	$2 251	$2 049	$2 553	$2 345	$2 419	$2 124
WTSE-24120	24" x 120"	$2 058	$1 754	$2 476	$2 253	$2 809	$2 579	$2 661	$2 336
WTSE-24132	24" x 132"	$2 263	$1 929	$2 723	$2 479	$3 090	$2 837	$2 927	$2 570
WTSE-24144	24" x 144"	$2 490	$2 122	$2 996	$2 727	$3 399	$3 121	$3 219	$2 827
WTSE-3036	30" x 36"	$993	$857	$1 244	$1 136	$1 488	$1 222	$1 270	$1 116
WTSE-3048	30" x 48"	$1 093	$943	$1 368	$1 249	$1 636	$1 344	$1 397	$1 228
WTSE-3060	30" x 60"	$1 202	$1 037	$1 505	$1 374	$1 800	$1 478	$1 537	$1 350
WTSE-3072	30" x 72"	$1 322	$1 141	$1 655	$1 512	$1 980	$1 626	$1 690	$1 485
WTSE-3084	30" x 84"	$1 455	$1 255	$1 821	$1 663	$2 178	$1 788	$1 859	$1 634
WTSE-3096	30" x 96"	$1 600	$1 380	$2 003	$1 829	$2 396	$1 967	$2 045	$1 797
WTSE-30108	30" x 108"	$1 760	$1 518	$2 203	$2 012	$2 635	$2 164	$2 250	$1 977
WTSE-30120	30" x 120"	$1 936	$1 670	$2 423	$2 213	$2 899	$2 380	$2 475	$2 175
WTSE-30132	30" x 132"	$2 130	$1 837	$2 666	$2 435	$3 189	$2 619	$2 722	$2 392
WTSE-30144	30" x 144"	$2 343	$2 021	$2 932	$2 678	$3 507	$2 880	$2 994	$2 632
WTSE-3636	36" x 36"	$1 047	$903	$1 298	$1 172	$1 639	$1 321	$1 376	$1 142
WTSE-3648	36" x 48"	$1 152	$993	$1 428	$1 290	$1 803	$1 453	$1 514	$1 257
WTSE-3660	36" x 60"	$1 267	$1 092	$1 571	$1 419	$1 983	$1 599	$1 665	$1 382
WTSE-3672	36" x 72"	$1 394	$1 201	$1 728	$1 560	$2 182	$1 758	$1 832	$1 520
WTSE-3684	36" x 84"	$1 533	$1 322	$1 901	$1 716	$2 400	$1 934	$2 015	$1 673
WTSE-3696	36" x 96"	$1 687	$1 454	$2 091	$1 888	$2 640	$2 128	$2 216	$1 840
WTSE-36108	36" x 108"	$1 855	$1 599	$2 300	$2 077	$2 904	$2 340	$2 438	$2 024
WTSE-36120	36" x 120"	$2 041	$1 759	$2 530	$2 285	$3 194	$2 574	$2 682	$2 226
WTSE-36132	36" x 132"	$2 245	$1 935	$2 783	$2 513	$3 514	$2 832	$2 950	$2 449
WTSE-36144	36" x 144"	$2 469	$2 128	$3 062	$2 764	$3 865	$3 115	$3 245	$2 694
WTSE-4248	42" x 48"	$1 151	$1 151	$1 425	$1 344	$1 895	$1 516	$1 895	$1 516
WTSE-4260	42" x 60"	$1 266	$1 266	$1 568	$1 479	$2 084	$1 667	$2 084	$1 667
WTSE-4272	42" x 72"	$1 392	$1 392	$1 724	$1 627	$2 293	$1 834	$2 293	$1 834
WTSE-4284	42" x 84"	$1 532	$1 532	$1 897	$1 789	$2 522	$2 017	$2 522	$2 017
WTSE-4296	42" x 96"	$1 685	$1 685	$2 087	$1 968	$2 774	$2 219	$2 774	$2 219
WTSE-42108	42" x 108"	$1 853	$1 853	$2 295	$2 165	$3 052	$2 441	$3 052	$2 441
WTSE-42120	42" x 120"	$2 039	$2 039	$2 525	$2 382	$3 357	$2 685	$3 357	$2 685
WTSE-42132	42" x 132"	$2 242	$2 242	$2 777	$2 620	$3 693	$2 953	$3 693	$2 953
WTSE-42144	42" x 144"	$2 467	$2 467	$3 055	$2 882	$4 062	$3 249	$4 062	$3 249

TABLES / **STANDARD EDGE**

ECONOMY WORK TABLE (KNOCKDOWN)

MODEL #	DIMENSIONS	KD-SC	KD-GC	KD-SU	KD-GU	KD-BSC	KD-BGC	KD-BSU	KD-BGU
	Width x Length	Knock Down Stainless Crossbracing	Knock Down Galvanized Crossbracing	Knock Down Stainless Undershelf	Knock Down Galvanized Undershelf	Knock Down Backsplash Stainless Crossbracing	Knock Down Backsplash Galvanized Crossbracing	Knock Down Backsplash Stainless Undershelf	Knock Down Backsplash Galvanized Undershelf
WTSE-4848	48" x 48"	$1 180	$1 023	$1 518	$1 391	$2 031	$1 615	$2 031	$1 615
WTSE-4860	48" x 60"	$1 298	$1 126	$1 670	$1 530	$2 234	$1 777	$2 234	$1 777
WTSE-4872	48" x 72"	$1 428	$1 238	$1 837	$1 684	$2 457	$1 954	$2 457	$1 954
WTSE-4884	48" x 84"	$1 571	$1 362	$2 020	$1 852	$2 703	$2 150	$2 703	$2 150
WTSE-4896	48" x 96"	$1 728	$1 498	$2 223	$2 037	$2 974	$2 365	$2 974	$2 365
WTSE-48108	48" x 108"	$1 901	$1 648	$2 445	$2 241	$3 271	$2 601	$3 271	$2 601
WTSE-48120	48" x 120"	$2 091	$1 813	$2 689	$2 465	$3 598	$2 861	$3 598	$2 861
WTSE-48132	48" x 132"	$2 300	$1 994	$2 958	$2 711	$3 958	$3 148	$3 958	$3 148
WTSE-48144	48" x 144"	$2 530	$2 194	$3 254	$2 982	$4 354	$3 462	$4 354	$3 462
WTSE-5660	56" x 60"	$1 909	$1 757	$1 901	$1 857	$2 515	$1 794	$2 515	$1 794
WTSE-5672	56" x 72"	$2 100	$1 933	$2 091	$2 042	$2 766	$1 974	$2 766	$1 974
WTSE-5684	56" x 84"	$2 310	$2 126	$2 301	$2 247	$3 043	$2 171	$3 043	$2 171
WTSE-5696	56" x 96"	$2 541	$2 339	$2 531	$2 471	$3 347	$2 388	$3 347	$2 388
WTSE-56108	56" x 108"	$2 795	$2 572	$2 784	$2 718	$3 682	$2 627	$3 682	$2 627
WTSE-56120	56" x 120"	$3 075	$2 830	$3 062	$2 990	$4 050	$2 890	$4 050	$2 890
WTSE-56132	56" x 132"	$3 382	$3 113	$3 368	$3 289	$4 455	$3 179	$4 455	$3 179
WTSE-56144	56" x 144"	$3 721	$3 424	$3 705	$3 618	$4 900	$3 497	$4 900	$3 468

QUALITY WORK TABLE (WELDED)

MODEL #	DIMENSIONS	SC	GC	SU	GU	BSC	BGC	BSU	BGU
	Width x Length	Stainless Crossbracing	Galvanized Crossbracing	Stainless Undersheld	Galvanized Undershelf	Backsplash Stainless Crossbracing	Backsplash Galvanized Crossbracing	Backsplash Stainless Undershelf	Backplash Galvanized Undershelf
WTSQ-1824	18" x 24"	$1 092	$906	$1 306	$1 134	$1 399	$1 149	$1 400	$1 233
WTSQ-1836	18" x 36"	$1 202	$996	$1 437	$1 248	$1 539	$1 264	$1 540	$1 356
WTSQ-1848	18" x 48"	$1 322	$1 096	$1 580	$1 372	$1 693	$1 390	$1 694	$1 491
WTSQ-1860	18" x 60"	$1 454	$1 205	$1 738	$1 510	$1 862	$1 529	$1 864	$1 641
WTSQ-1872	18" x 72"	$1 600	$1 326	$1 912	$1 661	$2 048	$1 682	$2 050	$1 805
WTSQ-1884	18" x 84"	$1 759	$1 458	$2 104	$1 827	$2 253	$1 851	$2 255	$1 985
WTSQ-1896	18" x 96"	$1 935	$1 604	$2 314	$2 009	$2 478	$2 036	$2 481	$2 184
WTSQ-18108	18" x 108"	$2 129	$1 765	$2 545	$2 210	$2 726	$2 239	$2 729	$2 402
WTSQ-18120	18" x 120"	$2 342	$1 941	$2 800	$2 431	$2 999	$2 463	$3 002	$2 642
WTSQ-18132	18" x 132"	$2 576	$2 135	$3 080	$2 674	$3 299	$2 710	$3 302	$2 906
WTSQ-18144	18" x 144"	$2 834	$2 349	$3 388	$2 942	$3 629	$2 980	$3 632	$3 197
WTSQ-2424	24" x 24"	$1 109	$945	$1 334	$1 214	$1 513	$1 390	$1 434	$1 259
WTSQ-2436	24" x 36"	$1 220	$1 039	$1 467	$1 336	$1 665	$1 529	$1 577	$1 385
WTSQ-2448	24" x 48"	$1 342	$1 143	$1 614	$1 469	$1 831	$1 682	$1 735	$1 523
WTSQ-2460	24" x 60"	$1 476	$1 258	$1 776	$1 616	$2 014	$1 850	$1 908	$1 675
WTSQ-2472	24" x 72"	$1 623	$1 383	$1 953	$1 778	$2 216	$2 035	$2 099	$1 843
WTSQ-2484	24" x 84"	$1 786	$1 522	$2 148	$1 956	$2 437	$2 238	$2 309	$2 027
WTSQ-2496	24" x 96"	$1 964	$1 674	$2 363	$2 151	$2 681	$2 462	$2 540	$2 230
WTSQ-24108	24" x 108"	$2 161	$1 841	$2 600	$2 366	$2 949	$2 708	$2 794	$2 453

QUALITY WORK TABLE (WELDED)

MODEL #	DIMENSIONS	SC	GC	SU	GU	BSC	BGC	BSU	BGU
	Width x Length	Stainless Crossbracing	Galvanized Crossbracing	Stainless Undersheld	Galvanized Undershelf	Backsplash Stainless Crossbracing	Backsplash Galvanized Crossbracing	Backsplash Stainless Undershelf	Backplash Galvanized Undershelf
WTSQ-24120	24" x 120"	$2 377	$2 025	$2 860	$2 603	$3 244	$2 979	$3 073	$2 698
WTSQ-24132	24" x 132"	$2 614	$2 228	$3 145	$2 863	$3 568	$3 277	$3 380	$2 968
WTSQ-24144	24" x 144"	$2 876	$2 451	$3 460	$3 149	$3 925	$3 605	$3 718	$3 265
WTSQ-3036	30" x 36"	$1 147	$990	$1 436	$1 312	$1 718	$1 411	$1 467	$1 289
WTSQ-3048	30" x 48"	$1 262	$1 089	$1 580	$1 443	$1 890	$1 552	$1 613	$1 418
WTSQ-3060	30" x 60"	$1 388	$1 198	$1 738	$1 587	$2 079	$1 707	$1 775	$1 560
WTSQ-3072	30" x 72"	$1 527	$1 317	$1 912	$1 746	$2 287	$1 878	$1 952	$1 716
WTSQ-3084	30" x 84"	$1 680	$1 449	$2 103	$1 921	$2 515	$2 066	$2 148	$1 887
WTSQ-3096	30" x 96"	$1 848	$1 594	$2 313	$2 113	$2 767	$2 272	$2 362	$2 076
WTSQ-30108	30" x 108"	$2 033	$1 753	$2 545	$2 324	$3 044	$2 499	$2 599	$2 284
WTSQ-30120	30" x 120"	$2 236	$1 929	$2 799	$2 556	$3 348	$2 749	$2 858	$2 512
WTSQ-30132	30" x 132"	$2 460	$2 122	$3 079	$2 812	$3 683	$3 024	$3 144	$2 763
WTSQ-30144	30" x 144"	$2 706	$2 334	$3 387	$3 093	$4 051	$3 327	$3 459	$3 040
WTSQ-3636	36" x 36"	$1 210	$1 043	$1 500	$1 354	$1 893	$1 526	$1 589	$1 319
WTSQ-3648	36" x 48"	$1 331	$1 147	$1 650	$1 490	$2 083	$1 678	$1 748	$1 451
WTSQ-3660	36" x 60"	$1 464	$1 262	$1 815	$1 638	$2 291	$1 846	$1 923	$1 596
WTSQ-3672	36" x 72"	$1 610	$1 388	$1 996	$1 802	$2 520	$2 031	$2 115	$1 756
WTSQ-3684	36" x 84"	$1 771	$1 526	$2 196	$1 983	$2 772	$2 234	$2 327	$1 932
WTSQ-3696	36" x 96"	$1 948	$1 679	$2 415	$2 181	$3 049	$2 457	$2 560	$2 125
WTSQ-36108	36" x 108"	$2 143	$1 847	$2 657	$2 399	$3 354	$2 703	$2 816	$2 337
WTSQ-36120	36" x 120"	$2 357	$2 032	$2 923	$2 639	$3 689	$2 973	$3 097	$2 571
WTSQ-36132	36" x 132"	$2 593	$2 235	$3 215	$2 903	$4 058	$3 271	$3 407	$2 828
WTSQ-36144	36" x 144"	$2 852	$2 458	$3 536	$3 193	$4 464	$3 598	$3 748	$3 111
WTSQ-4248	42" x 48"	$1 329	$1 329	$1 646	$1 553	$2 189	$1 750	$2 189	$1 750
WTSQ-4260	42" x 60"	$1 462	$1 462	$1 811	$1 708	$2 407	$1 926	$2 407	$1 926
WTSQ-4272	42" x 72"	$1 608	$1 608	$1 992	$1 879	$2 648	$2 118	$2 648	$2 118
WTSQ-4284	42" x 84"	$1 769	$1 769	$2 191	$2 067	$2 913	$2 330	$2 913	$2 330
WTSQ-4296	42" x 96"	$1 946	$1 946	$2 410	$2 273	$3 204	$2 563	$3 204	$2 563
WTSQ-42108	42" x 108"	$2 141	$2 141	$2 651	$2 501	$3 525	$2 819	$3 525	$2 819
WTSQ-42120	42" x 120"	$2 355	$2 355	$2 916	$2 751	$3 877	$3 101	$3 877	$3 101
WTSQ-42132	42" x 132"	$2 590	$2 590	$3 208	$3 026	$4 265	$3 411	$4 265	$3 411
WTSQ-42144	42" x 144"	$2 849	$2 849	$3 528	$3 328	$4 691	$3 752	$4 691	$3 752
WTSQ-4848	48" x 48"	$1 363	$1 182	$1 753	$1 607	$2 346	$1 866	$2 346	$1 866
WTSQ-4860	48" x 60"	$1 500	$1 300	$1 929	$1 768	$2 580	$2 052	$2 580	$2 052
WTSQ-4872	48" x 72"	$1 650	$1 430	$2 121	$1 944	$2 838	$2 257	$2 838	$2 257
WTSQ-4884	48" x 84"	$1 815	$1 573	$2 334	$2 139	$3 122	$2 483	$3 122	$2 483
WTSQ-4896	48" x 96"	$1 996	$1 731	$2 567	$2 353	$3 434	$2 731	$3 434	$2 731
WTSQ-48108	48" x 108"	$2 196	$1 904	$2 824	$2 588	$3 778	$3 005	$3 778	$3 005
WTSQ-48120	48" x 120"	$2 415	$2 094	$3 106	$2 847	$4 156	$3 305	$4 156	$3 305
WTSQ-48132	48" x 132"	$2 657	$2 303	$3 417	$3 132	$4 571	$3 635	$4 571	$3 635
WTSQ-48144	48" x 144"	$2 922	$2 534	$3 758	$3 445	$5 028	$3 999	$5 028	$3 999
WTSQ-5660	56" x 60"	$2 205	$2 029	$2 196	$2 144	$2 904	$2 072	$2 904	$2 072
WTSQ-5672	56" x 72"	$2 426	$2 232	$2 416	$2 359	$3 195	$2 280	$3 195	$2 280

TABLES / **STANDARD EDGE**

QUALITY WORK TABLE (WELDED)

MODEL #	DIMENSIONS	SC	GC	SU	GU	BSC	BGC	BSU	BGU
	Width x Length	Stainless Crossbracing	Galvanized Crossbracing	Stainless Undersheld	Galvanized Undershelf	Backsplash Stainless Crossbracing	Backsplash Galvanized Crossbracing	Backsplash Stainless Undershelf	Backplash Galvanized Undershelf
WTSQ-5684	56" x 84"	$2 668	$2 455	$2 657	$2 595	$3 514	$2 508	$3 514	$2 508
WTSQ-5696	56" x 96"	$2 935	$2 701	$2 923	$2 854	$3 866	$2 758	$3 866	$2 758
WTSQ-56108	56" x 108"	$3 229	$2 971	$3 215	$3 140	$4 252	$3 034	$4 252	$3 034
WTSQ-56120	56" x 120"	$3 552	$3 268	$3 537	$3 454	$4 678	$3 338	$4 678	$3 338
WTSQ-56132	56" x 132"	$3 907	$3 595	$3 890	$3 799	$5 145	$3 671	$5 145	$3 671
WTSQ-56144	56" x 144"	$4 297	$3 955	$4 279	$4 179	$5 660	$4 039	$5 660	$4 039

QUALITY WORK TABLE (KNOCKDOWN)

MODEL #	DIMENSIONS	KD-SC	KD-GC	KD-SU	KD-GU	KD-BSC	KD-BGC	KD-BSU	KD-BGU
	Width x Length	Knock Down Stainless Crossbracing	Knock Down Galvanized Crossbracing	Knock Down Stainless Undershelf	Knock Down Galvanized Undershelf	Knock Down Backsplash Stainless Crossbracing	Knock Down Backsplash Galvanized Crossbracing	Knock Down Backsplash Stainless Undershelf	Knock Down Backsplash Galvanized Undershelf
WTSQ-1824	18" x 24"	$1 040	$895	$1 244	$1 080	$1 332	$1 094	$1 334	$1 174
WTSQ-1836	18" x 36"	$1 145	$984	$1 368	$1 188	$1 466	$1 204	$1 467	$1 291
WTSQ-1848	18" x 48"	$1 259	$1 083	$1 505	$1 307	$1 612	$1 324	$1 614	$1 420
WTSQ-1860	18" x 60"	$1 385	$1 191	$1 656	$1 438	$1 773	$1 457	$1 775	$1 562
WTSQ-1872	18" x 72"	$1 523	$1 310	$1 821	$1 581	$1 951	$1 602	$1 953	$1 719
WTSQ-1884	18" x 84"	$1 676	$1 441	$2 003	$1 740	$2 146	$1 763	$2 148	$1 891
WTSQ-1896	18" x 96"	$1 843	$1 585	$2 204	$1 914	$2 360	$1 939	$2 363	$2 080
WTSQ-18108	18" x 108"	$2 028	$1 744	$2 424	$2 105	$2 597	$2 133	$2 599	$2 288
WTSQ-18120	18" x 120"	$2 230	$1 918	$2 666	$2 315	$2 856	$2 346	$2 859	$2 516
WTSQ-18132	18" x 132"	$2 453	$2 110	$2 933	$2 547	$3 142	$2 580	$3 145	$2 768
WTSQ-18144	18" x 144"	$2 699	$2 321	$3 226	$2 802	$3 456	$2 839	$3 459	$3 045
WTSQ-2424	24" x 24"	$1 056	$900	$1 270	$1 156	$1 441	$1 324	$1 365	$1 199
WTSQ-2436	24" x 36"	$1 162	$990	$1 398	$1 272	$1 585	$1 456	$1 502	$1 319
WTSQ-2448	24" x 48"	$1 278	$1 089	$1 537	$1 399	$1 744	$1 601	$1 652	$1 451
WTSQ-2460	24" x 60"	$1 405	$1 198	$1 691	$1 539	$1 918	$1 762	$1 817	$1 596
WTSQ-2472	24" x 72"	$1 546	$1 318	$1 860	$1 693	$2 110	$1 938	$1 999	$1 755
WTSQ-2484	24" x 84"	$1 701	$1 449	$2 046	$1 862	$2 321	$2 132	$2 199	$1 931
WTSQ-2496	24" x 96"	$1 871	$1 594	$2 251	$2 049	$2 553	$2 345	$2 419	$2 124
WTSQ-24108	24" x 108"	$2 058	$1 754	$2 476	$2 253	$2 809	$2 579	$2 661	$2 336
WTSQ-24120	24" x 120"	$2 263	$1 929	$2 723	$2 479	$3 090	$2 837	$2 927	$2 570
WTSQ-24132	24" x 132"	$2 490	$2 122	$2 996	$2 727	$3 399	$3 121	$3 219	$2 827
WTSQ-24144	24" x 144"	$2 739	$2 334	$3 295	$2 999	$3 738	$3 433	$3 541	$3 109
WTSQ-3036	30" x 36"	$1 093	$943	$1 368	$1 249	$1 636	$1 344	$1 397	$1 228
WTSQ-3048	30" x 48"	$1 202	$1 037	$1 505	$1 374	$1 800	$1 478	$1 537	$1 350
WTSQ-3060	30" x 60"	$1 322	$1 141	$1 655	$1 512	$1 980	$1 626	$1 690	$1 485
WTSQ-3072	30" x 72"	$1 455	$1 255	$1 821	$1 663	$2 178	$1 788	$1 859	$1 634
WTSQ-3084	30" x 84"	$1 600	$1 380	$2 003	$1 829	$2 396	$1 967	$2 045	$1 797
WTSQ-3096	30" x 96"	$1 760	$1 518	$2 203	$2 012	$2 635	$2 164	$2 250	$1 977

QUALITY WORK TABLE (KNOCKDOWN)

MODEL #	DIMENSIONS	KD-SC	KD-GC	KD-SU	KD-GU	KD-BSC	KD-BGC	KD-BSU	KD-BGU
	Width x Length	Knock Down Stainless Crossbracing	Knock Down Galvanized Crossbracing	Knock Down Stainless Undershelf	Knock Down Galvanized Undershelf	Knock Down Backsplash Stainless Crossbracing	Knock Down Backsplash Galvanized Crossbracing	Knock Down Backsplash Stainless Undershelf	Knock Down Backsplash Galvanized Undershelf
WTSQ-30108	30" x 108"	$1 936	$1 670	$2 423	$2 213	$2 899	$2 380	$2 475	$2 175
WTSQ-30120	30" x 120"	$2 130	$1 837	$2 666	$2 435	$3 189	$2 619	$2 722	$2 392
WTSQ-30132	30" x 132"	$2 343	$2 021	$2 932	$2 678	$3 507	$2 880	$2 994	$2 632
WTSQ-30144	30" x 144"	$2 577	$2 223	$3 226	$2 946	$3 858	$3 168	$3 294	$2 895
WTSQ-3636	36" x 36"	$1 152	$993	$1 428	$1 290	$1 803	$1 453	$1 514	$1 257
WTSQ-3648	36" x 48"	$1 267	$1 092	$1 571	$1 419	$1 983	$1 599	$1 665	$1 382
WTSQ-3660	36" x 60"	$1 394	$1 201	$1 728	$1 560	$2 182	$1 758	$1 832	$1 520
WTSQ-3672	36" x 72"	$1 533	$1 322	$1 901	$1 716	$2 400	$1 934	$2 015	$1 673
WTSQ-3684	36" x 84"	$1 687	$1 454	$2 091	$1 888	$2 640	$2 128	$2 216	$1 840
WTSQ-3696	36" x 96"	$1 855	$1 599	$2 300	$2 077	$2 904	$2 340	$2 438	$2 024
WTSQ-36108	36" x 108"	$2 041	$1 759	$2 530	$2 285	$3 194	$2 574	$2 682	$2 226
WTSQ-36120	36" x 120"	$2 245	$1 935	$2 783	$2 513	$3 514	$2 832	$2 950	$2 449
WTSQ-36132	36" x 132"	$2 469	$2 128	$3 062	$2 764	$3 865	$3 115	$3 245	$2 694
WTSQ-36144	36" x 144"	$2 716	$2 341	$3 368	$3 041	$4 252	$3 427	$3 569	$2 963
WTSQ-4248	42" x 48"	$1 266	$1 266	$1 568	$1 479	$2 084	$1 667	$2 084	$1 667
WTSQ-4260	42" x 60"	$1 392	$1 392	$1 724	$1 627	$2 293	$1 834	$2 293	$1 834
WTSQ-4272	42" x 72"	$1 532	$1 532	$1 897	$1 789	$2 522	$2 017	$2 522	$2 017
WTSQ-4284	42" x 84"	$1 685	$1 685	$2 087	$1 968	$2 774	$2 219	$2 774	$2 219
WTSQ-4296	42" x 96"	$1 853	$1 853	$2 295	$2 165	$3 052	$2 441	$3 052	$2 441
WTSQ-42108	42" x 108"	$2 039	$2 039	$2 525	$2 382	$3 357	$2 685	$3 357	$2 685
WTSQ-42120	42" x 120"	$2 242	$2 242	$2 777	$2 620	$3 693	$2 953	$3 693	$2 953
WTSQ-42132	42" x 132"	$2 467	$2 467	$3 055	$2 882	$4 062	$3 249	$4 062	$3 249
WTSQ-42144	42" x 144"	$2 713	$2 713	$3 360	$3 170	$4 468	$3 574	$4 468	$3 574
WTSQ-4848	48" x 48"	$1 298	$1 126	$1 670	$1 530	$2 234	$1 777	$2 234	$1 777
WTSQ-4860	48" x 60"	$1 428	$1 238	$1 837	$1 684	$2 457	$1 954	$2 457	$1 954
WTSQ-4872	48" x 72"	$1 571	$1 362	$2 020	$1 852	$2 703	$2 150	$2 703	$2 150
WTSQ-4884	48" x 84"	$1 728	$1 498	$2 223	$2 037	$2 974	$2 365	$2 974	$2 365
WTSQ-4896	48" x 96"	$1 901	$1 648	$2 445	$2 241	$3 271	$2 601	$3 271	$2 601
WTSQ-48108	48" x 108"	$2 091	$1 813	$2 689	$2 465	$3 598	$2 861	$3 598	$2 861
WTSQ-48120	48" x 120"	$2 300	$1 994	$2 958	$2 711	$3 958	$3 148	$3 958	$3 148
WTSQ-48132	48" x 132"	$2 530	$2 194	$3 254	$2 982	$4 354	$3 462	$4 354	$3 462
WTSQ-48144	48" x 144"	$2 783	$2 413	$3 579	$3 281	$4 789	$3 809	$4 789	$3 809
WTSQ-5660	56" x 60"	$2 100	$1 933	$2 091	$2 042	$2 766	$1 974	$2 766	$1 974
WTSQ-5672	56" x 72"	$2 310	$2 126	$2 301	$2 247	$3 043	$2 171	$3 043	$2 171
WTSQ-5684	56" x 84"	$2 541	$2 339	$2 531	$2 471	$3 347	$2 388	$3 347	$2 388
WTSQ-5696	56" x 96"	$2 795	$2 572	$2 784	$2 718	$3 682	$2 627	$3 682	$2 627
WTSQ-56108	56" x 108"	$3 075	$2 830	$3 062	$2 990	$4 050	$2 890	$4 050	$2 890
WTSQ-56120	56" x 120"	$3 382	$3 113	$3 368	$3 289	$4 455	$3 179	$4 455	$3 179
WTSQ-56132	56" x 132"	$3 721	$3 424	$3 705	$3 618	$4 900	$3 497	$4 900	$3 497
WTSQ-56144	56" x 144"	$4 093	$3 766	$4 076	$3 980	$5 391	$3 846	$5 391	$3 846

TABLES / **STANDARD EDGE**

SPEC WORK TABLE (WELDED)									
MODEL #	DIMENSIONS	SC	GC	SU	GU	BSC	BGC	BSU	BGU
	Width x Length	Stainless Crossbracing	Galvanized Crossbracing	Stainless Undersheld	Galvanized Undershelf	Backsplash Stainless Crossbracing	Backsplash Galvanized Crossbracing	Backsplash Stainless Undershelf	Backplash Galvanized Undershelf
WTSS-1824	18" x 24"	$1 256	$1 041	$1 502	$1 304	$1 609	$1 321	$1 610	$1 417
WTSS-1836	18" x 36"	$1 382	$1 145	$1 652	$1 435	$1 770	$1 454	$1 771	$1 559
WTSS-1848	18" x 48"	$1 520	$1 260	$1 817	$1 578	$1 947	$1 599	$1 949	$1 715
WTSS-1860	18" x 60"	$1 672	$1 386	$1 999	$1 736	$2 141	$1 759	$2 143	$1 887
WTSS-1872	18" x 72"	$1 839	$1 525	$2 199	$1 910	$2 356	$1 935	$2 358	$2 075
WTSS-1884	18" x 84"	$2 023	$1 677	$2 419	$2 101	$2 591	$2 128	$2 593	$2 283
WTSS-1896	18" x 96"	$2 226	$1 845	$2 661	$2 311	$2 850	$2 341	$2 853	$2 511
WTSS-18108	18" x 108"	$2 448	$2 029	$2 927	$2 542	$3 135	$2 575	$3 138	$2 762
WTSS-18120	18" x 120"	$2 693	$2 232	$3 220	$2 796	$3 449	$2 833	$3 452	$3 038
WTSS-18132	18" x 132"	$2 962	$2 455	$3 542	$3 076	$3 794	$3 116	$3 797	$3 342
WTSS-18144	18" x 144"	$3 259	$2 701	$3 896	$3 383	$4 173	$3 428	$4 177	$3 677
WTSS-2424	24" x 24"	$1 275	$1 087	$1 534	$1 396	$1 740	$1 598	$1 649	$1 448
WTSS-2436	24" x 36"	$1 403	$1 195	$1 688	$1 536	$1 914	$1 758	$1 813	$1 592
WTSS-2448	24" x 48"	$1 543	$1 315	$1 856	$1 690	$2 106	$1 934	$1 995	$1 752
WTSS-2460	24" x 60"	$1 697	$1 446	$2 042	$1 859	$2 316	$2 127	$2 194	$1 927
WTSS-2472	24" x 72"	$1 867	$1 591	$2 246	$2 044	$2 548	$2 340	$2 414	$2 119
WTSS-2484	24" x 84"	$2 053	$1 750	$2 471	$2 249	$2 803	$2 574	$2 655	$2 331
WTSS-2496	24" x 96"	$2 259	$1 925	$2 718	$2 474	$3 083	$2 831	$2 921	$2 564
WTSS-24108	24" x 108"	$2 485	$2 118	$2 990	$2 721	$3 392	$3 114	$3 213	$2 821
WTSS-24120	24" x 120"	$2 733	$2 329	$3 288	$2 993	$3 731	$3 426	$3 534	$3 103
WTSS-24132	24" x 132"	$3 006	$2 562	$3 617	$3 293	$4 104	$3 768	$3 887	$3 413
WTSS-24144	24" x 144"	$3 307	$2 818	$3 979	$3 622	$4 514	$4 145	$4 276	$3 755
WTSS-3036	30" x 36"	$1 320	$1 138	$1 652	$1 509	$1 976	$1 623	$1 687	$1 482
WTSS-3048	30" x 48"	$1 452	$1 252	$1 817	$1 659	$2 173	$1 785	$1 856	$1 631
WTSS-3060	30" x 60"	$1 597	$1 377	$1 999	$1 825	$2 391	$1 963	$2 041	$1 794
WTSS-3072	30" x 72"	$1 756	$1 515	$2 199	$2 008	$2 630	$2 160	$2 245	$1 973
WTSS-3084	30" x 84"	$1 932	$1 666	$2 418	$2 209	$2 893	$2 376	$2 470	$2 170
WTSS-3096	30" x 96"	$2 125	$1 833	$2 660	$2 430	$3 182	$2 613	$2 717	$2 387
WTSS-30108	30" x 108"	$2 338	$2 016	$2 926	$2 673	$3 500	$2 874	$2 988	$2 626
WTSS-30120	30" x 120"	$2 571	$2 218	$3 219	$2 940	$3 850	$3 162	$3 287	$2 889
WTSS-30132	30" x 132"	$2 829	$2 440	$3 541	$3 234	$4 235	$3 478	$3 616	$3 178
WTSS-30144	30" x 144"	$3 111	$2 684	$3 895	$3 557	$4 659	$3 826	$3 977	$3 495
WTSS-3636	36" x 36"	$1 391	$1 199	$1 725	$1 557	$2 177	$1 755	$1 828	$1 517
WTSS-3648	36" x 48"	$1 530	$1 319	$1 897	$1 713	$2 395	$1 930	$2 011	$1 669
WTSS-3660	36" x 60"	$1 683	$1 451	$2 087	$1 884	$2 634	$2 123	$2 212	$1 836
WTSS-3672	36" x 72"	$1 852	$1 596	$2 296	$2 073	$2 898	$2 336	$2 433	$2 020
WTSS-3684	36" x 84"	$2 037	$1 755	$2 525	$2 280	$3 188	$2 569	$2 676	$2 222
WTSS-3696	36" x 96"	$2 240	$1 931	$2 778	$2 508	$3 506	$2 826	$2 944	$2 444
WTSS-36108	36" x 108"	$2 464	$2 124	$3 055	$2 759	$3 857	$3 109	$3 238	$2 688
WTSS-36120	36" x 120"	$2 711	$2 336	$3 361	$3 035	$4 243	$3 419	$3 562	$2 957
WTSS-36132	36" x 132"	$2 982	$2 570	$3 697	$3 338	$4 667	$3 761	$3 918	$3 253
WTSS-36144	36" x 144"	$3 280	$2 827	$4 067	$3 672	$5 134	$4 138	$4 310	$3 578

SPEC WORK TABLE (WELDED)

MODEL #	DIMENSIONS	SC	GC	SU	GU	BSC	BGC	BSU	BGU
	Width x Length	Stainless Crossbracing	Galvanized Crossbracing	Stainless Undersheld	Galvanized Undershelf	Backsplash Stainless Crossbracing	Backsplash Galvanized Crossbracing	Backsplash Stainless Undershelf	Backplash Galvanized Undershelf
WTSS-4248	42" x 48"	$1 528	$1 528	$1 893	$1 786	$2 517	$2 013	$2 517	$2 013
WTSS-4260	42" x 60"	$1 681	$1 681	$2 082	$1 964	$2 769	$2 214	$2 769	$2 214
WTSS-4272	42" x 72"	$1 849	$1 849	$2 290	$2 161	$3 045	$2 436	$3 045	$2 436
WTSS-4284	42" x 84"	$2 034	$2 034	$2 519	$2 377	$3 350	$2 679	$3 350	$2 679
WTSS-4296	42" x 96"	$2 238	$2 238	$2 771	$2 614	$3 685	$2 947	$3 685	$2 947
WTSS-42108	42" x 108"	$2 462	$2 462	$3 049	$2 876	$4 053	$3 242	$4 053	$3 242
WTSS-42120	42" x 120"	$2 708	$2 708	$3 353	$3 163	$4 459	$3 566	$4 459	$3 566
WTSS-42132	42" x 132"	$2 979	$2 979	$3 689	$3 480	$4 905	$3 923	$4 905	$3 923
WTSS-42144	42" x 144"	$3 276	$3 276	$4 058	$3 828	$5 395	$4 315	$5 395	$4 315
WTSS-4848	48" x 48"	$1 568	$1 359	$2 016	$1 848	$2 698	$2 145	$2 698	$2 145
WTSS-4860	48" x 60"	$1 725	$1 495	$2 218	$2 033	$2 967	$2 360	$2 967	$2 360
WTSS-4872	48" x 72"	$1 897	$1 645	$2 440	$2 236	$3 264	$2 596	$3 264	$2 596
WTSS-4884	48" x 84"	$2 087	$1 809	$2 684	$2 460	$3 591	$2 856	$3 591	$2 856
WTSS-4896	48" x 96"	$2 295	$1 990	$2 952	$2 706	$3 950	$3 141	$3 950	$3 141
WTSS-48108	48" x 108"	$2 525	$2 189	$3 247	$2 976	$4 345	$3 455	$4 345	$3 455
WTSS-48120	48" x 120"	$2 777	$2 408	$3 572	$3 274	$4 779	$3 801	$4 779	$3 801
WTSS-48132	48" x 132"	$3 055	$2 649	$3 929	$3 601	$5 257	$4 181	$5 257	$4 181
WTSS-48144	48" x 144"	$3 361	$2 914	$4 322	$3 961	$5 783	$4 599	$5 783	$4 599
WTSS-5660	56" x 60"	$2 536	$2 334	$2 525	$2 466	$3 340	$2 383	$3 340	$2 383
WTSS-5672	56" x 72"	$2 790	$2 567	$2 778	$2 713	$3 674	$2 622	$3 674	$2 622
WTSS-5684	56" x 84"	$3 069	$2 824	$3 056	$2 984	$4 042	$2 884	$4 042	$2 884
WTSS-5696	56" x 96"	$3 375	$3 106	$3 361	$3 282	$4 446	$3 172	$4 446	$3 172
WTSS-56108	56" x 108"	$3 713	$3 417	$3 698	$3 611	$4 890	$3 489	$4 890	$3 489
WTSS-56120	56" x 120"	$4 084	$3 758	$4 067	$3 972	$5 379	$3 838	$5 379	$3 838
WTSS-56132	56" x 132"	$4 493	$4 134	$4 474	$4 369	$5 917	$4 222	$5 917	$4 222
WTSS-56144	56" x 144"	$4 942	$4 548	$4 921	$4 806	$6 509	$4 644	$6 509	$4 644

SPEC WORK TABLE (KNOCKDOWN)

MODEL #	DIMENSIONS	KD-SC	KD-GC	KD-SU	KD-GU	KD-BSC	KD-BGC	KD-BSU	KD-BGU
	Width x Length	Knock Down Stainless Crossbracing	Knock Down Galvanized Crossbracing	Knock Down Stainless Undershelf	Knock Down Galvanized Undershelf	Knock Down Backsplash Stainless Crossbracing	Knock Down Backsplash Galvanized Crossbracing	Knock Down Backsplash Stainless Undershelf	Knock Down Backsplash Galvanized Undershelf
WTSS-1824	18" x 24"	$1 197	$1 029	$1 431	$1 242	$1 532	$1 259	$1 534	$1 350
WTSS-1836	18" x 36"	$1 316	$1 132	$1 574	$1 366	$1 686	$1 384	$1 687	$1 485
WTSS-1848	18" x 48"	$1 448	$1 245	$1 731	$1 503	$1 854	$1 523	$1 856	$1 633
WTSS-1860	18" x 60"	$1 593	$1 370	$1 904	$1 653	$2 039	$1 675	$2 041	$1 797
WTSS-1872	18" x 72"	$1 752	$1 507	$2 094	$1 819	$2 243	$1 843	$2 245	$1 977
WTSS-1884	18" x 84"	$1 927	$1 658	$2 304	$2 001	$2 468	$2 027	$2 470	$2 174
WTSS-1896	18" x 96"	$2 120	$1 823	$2 534	$2 201	$2 715	$2 230	$2 717	$2 392
WTSS-18108	18" x 108"	$2 332	$2 006	$2 788	$2 421	$2 986	$2 453	$2 989	$2 631
WTSS-18120	18" x 120"	$2 565	$2 206	$3 066	$2 663	$3 285	$2 698	$3 288	$2 894
WTSS-18132	18" x 132"	$2 821	$2 427	$3 373	$2 929	$3 613	$2 968	$3 616	$3 183
WTSS-18144	18" x 144"	$3 104	$2 669	$3 710	$3 222	$3 974	$3 264	$3 978	$3 501

TABLES / **STANDARD EDGE**

SPEC WORK TABLE (KNOCKDOWN)									
MODEL #	DIMENSIONS	KD-SC	KD-GC	KD-SU	KD-GU	KD-BSC	KD-BGC	KD-BSU	KD-BGU
	Width x Length	Knock Down Stainless Crossbracing	Knock Down Galvanized Crossbracing	Knock Down Stainless Undershelf	Knock Down Galvanized Undershelf	Knock Down Backsplash Stainless Crossbracing	Knock Down Backsplash Galvanized Crossbracing	Knock Down Backsplash Stainless Undershelf	Knock Down Backsplash Galvanized Undershelf
WTSS-2424	24" x 24"	$1 214	$1 035	$1 461	$1 330	$1 658	$1 522	$1 570	$1 379
WTSS-2436	24" x 36"	$1 336	$1 138	$1 607	$1 463	$1 823	$1 674	$1 727	$1 516
WTSS-2448	24" x 48"	$1 469	$1 252	$1 768	$1 609	$2 006	$1 842	$1 900	$1 668
WTSS-2460	24" x 60"	$1 616	$1 377	$1 945	$1 770	$2 206	$2 026	$2 090	$1 835
WTSS-2472	24" x 72"	$1 778	$1 515	$2 139	$1 947	$2 427	$2 228	$2 299	$2 018
WTSS-2484	24" x 84"	$1 956	$1 667	$2 353	$2 142	$2 669	$2 451	$2 529	$2 220
WTSS-2496	24" x 96"	$2 151	$1 833	$2 588	$2 356	$2 936	$2 696	$2 781	$2 442
WTSS-24108	24" x 108"	$2 366	$2 017	$2 847	$2 592	$3 230	$2 966	$3 060	$2 686
WTSS-24120	24" x 120"	$2 603	$2 218	$3 132	$2 851	$3 553	$3 263	$3 366	$2 955
WTSS-24132	24" x 132"	$2 863	$2 440	$3 445	$3 136	$3 908	$3 589	$3 702	$3 251
WTSS-24144	24" x 144"	$3 150	$2 684	$3 790	$3 449	$4 299	$3 948	$4 072	$3 576
WTSS-3036	30" x 36"	$1 257	$1 084	$1 573	$1 437	$1 882	$1 545	$1 606	$1 412
WTSS-3048	30" x 48"	$1 382	$1 192	$1 730	$1 580	$2 070	$1 700	$1 767	$1 553
WTSS-3060	30" x 60"	$1 521	$1 312	$1 904	$1 738	$2 277	$1 870	$1 944	$1 708
WTSS-3072	30" x 72"	$1 673	$1 443	$2 094	$1 912	$2 505	$2 057	$2 138	$1 879
WTSS-3084	30" x 84"	$1 840	$1 587	$2 303	$2 104	$2 755	$2 262	$2 352	$2 067
WTSS-3096	30" x 96"	$2 024	$1 746	$2 534	$2 314	$3 030	$2 489	$2 587	$2 274
WTSS-30108	30" x 108"	$2 226	$1 920	$2 787	$2 545	$3 334	$2 738	$2 846	$2 501
WTSS-30120	30" x 120"	$2 449	$2 112	$3 066	$2 800	$3 667	$3 011	$3 131	$2 751
WTSS-30132	30" x 132"	$2 694	$2 324	$3 372	$3 080	$4 034	$3 312	$3 444	$3 026
WTSS-30144	30" x 144"	$2 963	$2 556	$3 709	$3 388	$4 437	$3 644	$3 788	$3 329
WTSS-3636	36" x 36"	$1 325	$1 142	$1 643	$1 483	$2 074	$1 671	$1 741	$1 445
WTSS-3648	36" x 48"	$1 457	$1 256	$1 807	$1 631	$2 281	$1 838	$1 915	$1 590
WTSS-3660	36" x 60"	$1 603	$1 382	$1 988	$1 795	$2 509	$2 022	$2 106	$1 749
WTSS-3672	36" x 72"	$1 763	$1 520	$2 186	$1 974	$2 760	$2 224	$2 317	$1 923
WTSS-3684	36" x 84"	$1 940	$1 672	$2 405	$2 171	$3 036	$2 447	$2 549	$2 116
WTSS-3696	36" x 96"	$2 134	$1 839	$2 645	$2 388	$3 339	$2 691	$2 803	$2 327
WTSS-36108	36" x 108"	$2 347	$2 023	$2 910	$2 627	$3 673	$2 961	$3 084	$2 560
WTSS-36120	36" x 120"	$2 582	$2 225	$3 201	$2 890	$4 041	$3 257	$3 392	$2 816
WTSS-36132	36" x 132"	$2 840	$2 448	$3 521	$3 179	$4 445	$3 582	$3 731	$3 098
WTSS-36144	36" x 144"	$3 124	$2 692	$3 873	$3 497	$4 889	$3 941	$4 105	$3 407
WTSS-4248	42" x 48"	$1 456	$1 456	$1 803	$1 701	$2 397	$1 917	$2 397	$1 917
WTSS-4260	42" x 60"	$1 601	$1 601	$1 983	$1 871	$2 637	$2 109	$2 637	$2 109
WTSS-4272	42" x 72"	$1 761	$1 761	$2 181	$2 058	$2 900	$2 320	$2 900	$2 320
WTSS-4284	42" x 84"	$1 937	$1 937	$2 399	$2 264	$3 190	$2 552	$3 190	$2 552
WTSS-4296	42" x 96"	$2 131	$2 131	$2 639	$2 490	$3 510	$2 807	$3 510	$2 807
WTSS-42108	42" x 108"	$2 344	$2 344	$2 903	$2 739	$3 860	$3 088	$3 860	$3 088
WTSS-42120	42" x 120"	$2 579	$2 579	$3 194	$3 013	$4 247	$3 396	$4 247	$3 396
WTSS-42132	42" x 132"	$2 837	$2 837	$3 513	$3 314	$4 671	$3 736	$4 671	$3 736
WTSS-42144	42" x 144"	$3 120	$3 120	$3 864	$3 645	$5 138	$4 110	$5 138	$4 110
WTSS-4848	48" x 48"	$1 493	$1 295	$1 920	$1 760	$2 569	$2 043	$2 569	$2 043
WTSS-4860	48" x 60"	$1 642	$1 424	$2 112	$1 936	$2 826	$2 248	$2 826	$2 248

SPEC WORK TABLE (KNOCKDOWN)

MODEL #	DIMENSIONS	KD-SC	KD-GC	KD-SU	KD-GU	KD-BSC	KD-BGC	KD-BSU	KD-BGU
	Width x Length	Knock Down Stainless Crossbracing	Knock Down Galvanized Crossbracing	Knock Down Stainless Undershelf	Knock Down Galvanized Undershelf	Knock Down Backsplash Stainless Crossbracing	Knock Down Backsplash Galvanized Crossbracing	Knock Down Backsplash Stainless Undershelf	Knock Down Backsplash Galvanized Undershelf
WTSS-4872	48" x 72"	$1 807	$1 566	$2 324	$2 130	$3 109	$2 472	$3 109	$2 472
WTSS-4884	48" x 84"	$1 987	$1 723	$2 556	$2 343	$3 420	$2 720	$3 420	$2 720
WTSS-4896	48" x 96"	$2 186	$1 895	$2 811	$2 577	$3 762	$2 992	$3 762	$2 992
WTSS-48108	48" x 108"	$2 405	$2 085	$3 093	$2 835	$4 138	$3 291	$4 138	$3 291
WTSS-48120	48" x 120"	$2 645	$2 293	$3 402	$3 118	$4 551	$3 620	$4 551	$3 620
WTSS-48132	48" x 132"	$2 910	$2 523	$3 742	$3 430	$5 007	$3 982	$5 007	$3 982
WTSS-48144	48" x 144"	$3 201	$2 775	$4 116	$3 773	$5 507	$4 380	$5 507	$4 380
WTSS-5660	56" x 60"	$2 415	$2 223	$2 405	$2 349	$3 181	$2 270	$3 181	$2 270
WTSS-5672	56" x 72"	$2 657	$2 445	$2 646	$2 584	$3 499	$2 497	$3 499	$2 497
WTSS-5684	56" x 84"	$2 923	$2 689	$2 910	$2 842	$3 849	$2 746	$3 849	$2 746
WTSS-5696	56" x 96"	$3 215	$2 958	$3 201	$3 126	$4 234	$3 021	$4 234	$3 021
WTSS-56108	56" x 108"	$3 536	$3 254	$3 521	$3 439	$4 657	$3 323	$4 657	$3 323
WTSS-56120	56" x 120"	$3 890	$3 579	$3 874	$3 783	$5 123	$3 655	$5 123	$3 655
WTSS-56132	56" x 132"	$4 279	$3 937	$4 261	$4 161	$5 636	$4 021	$5 636	$4 021
WTSS-56144	56" x 144"	$4 707	$4 331	$4 687	$4 577	$6 199	$4 423	$6 199	$4 423

CONSULTANT WORK TABLE (WELDED)

MODEL #	DIMENSIONS	SC	GC	SU	GU	BSC	BGC	BSU	BGU
	Width x Length	Stainless Crossbracing	Galvanized Crossbracing	Stainless Undersheld	Galvanized Undershelf	Backsplash Stainless Crossbracing	Backsplash Galvanized Crossbracing	Backsplash Stainless Undershelf	Backplash Galvanized Undershelf
WTSC-1824	18" x 24"	$1 570	$1 302	$1 878	$1 630	$2 011	$1 652	$2 013	$1 772
WTSC-1836	18" x 36"	$1 728	$1 432	$2 065	$1 793	$2 212	$1 817	$2 214	$1 949
WTSC-1848	18" x 48"	$1 900	$1 575	$2 272	$1 973	$2 433	$1 999	$2 436	$2 144
WTSC-1860	18" x 60"	$2 090	$1 733	$2 499	$2 170	$2 677	$2 199	$2 679	$2 358
WTSC-1872	18" x 72"	$2 299	$1 906	$2 749	$2 387	$2 944	$2 418	$2 947	$2 594
WTSC-1884	18" x 84"	$2 529	$2 096	$3 024	$2 626	$3 239	$2 660	$3 242	$2 854
WTSC-1896	18" x 96"	$2 782	$2 306	$3 326	$2 888	$3 563	$2 926	$3 566	$3 139
WTSC-18108	18" x 108"	$3 060	$2 537	$3 659	$3 177	$3 919	$3 219	$3 923	$3 453
WTSC-18120	18" x 120"	$3 366	$2 790	$4 025	$3 495	$4 311	$3 541	$4 315	$3 798
WTSC-18132	18" x 132"	$3 703	$3 069	$4 427	$3 844	$4 742	$3 895	$4 746	$4 178
WTSC-18144	18" x 144"	$4 073	$3 376	$4 870	$4 229	$5 216	$4 284	$5 221	$4 596
WTSC-2424	24" x 24"	$1 594	$1 358	$1 918	$1 745	$2 175	$1 998	$2 061	$1 809
WTSC-2436	24" x 36"	$1 753	$1 494	$2 109	$1 920	$2 393	$2 197	$2 267	$1 990
WTSC-2448	24" x 48"	$1 928	$1 644	$2 320	$2 112	$2 632	$2 417	$2 493	$2 189
WTSC-2460	24" x 60"	$2 121	$1 808	$2 552	$2 323	$2 896	$2 659	$2 743	$2 408
WTSC-2472	24" x 72"	$2 333	$1 989	$2 808	$2 556	$3 185	$2 925	$3 017	$2 649
WTSC-2484	24" x 84"	$2 567	$2 188	$3 088	$2 811	$3 504	$3 217	$3 319	$2 914
WTSC-2496	24" x 96"	$2 823	$2 406	$3 397	$3 092	$3 854	$3 539	$3 651	$3 205
WTSC-24108	24" x 108"	$3 106	$2 647	$3 737	$3 401	$4 239	$3 893	$4 016	$3 526
WTSC-24120	24" x 120"	$3 416	$2 912	$4 111	$3 742	$4 663	$4 282	$4 417	$3 879
WTSC-24132	24" x 132"	$3 758	$3 203	$4 522	$4 116	$5 130	$4 710	$4 859	$4 266
WTSC-24144	24" x 144"	$4 134	$3 523	$4 974	$4 527	$5 643	$5 182	$5 345	$4 693
WTSC-3036	30" x 36"	$1 649	$1 423	$2 065	$1 886	$2 470	$2 028	$2 109	$1 853

TABLES / **STANDARD EDGE**

CONSULTANT WORK TABLE (WELDED)									
MODEL #	DIMENSIONS	SC	GC	SU	GU	BSC	BGC	BSU	BGU
	Width x Length	Stainless Crossbracing	Galvanized Crossbracing	Stainless Undersheld	Galvanized Undershelf	Backsplash Stainless Crossbracing	Backsplash Galvanized Crossbracing	Backsplash Stainless Undershelf	Backplash Galvanized Undershelf
WTSC-3048	30" x 48"	$1 814	$1 565	$2 271	$2 074	$2 717	$2 231	$2 319	$2 038
WTSC-3060	30" x 60"	$1 996	$1 722	$2 498	$2 282	$2 988	$2 454	$2 551	$2 242
WTSC-3072	30" x 72"	$2 195	$1 894	$2 748	$2 510	$3 287	$2 699	$2 806	$2 466
WTSC-3084	30" x 84"	$2 415	$2 083	$3 023	$2 761	$3 616	$2 969	$3 087	$2 713
WTSC-3096	30" x 96"	$2 656	$2 291	$3 325	$3 037	$3 978	$3 266	$3 396	$2 984
WTSC-30108	30" x 108"	$2 922	$2 520	$3 658	$3 341	$4 375	$3 593	$3 735	$3 283
WTSC-30120	30" x 120"	$3 214	$2 773	$4 024	$3 675	$4 813	$3 952	$4 109	$3 611
WTSC-30132	30" x 132"	$3 536	$3 050	$4 426	$4 042	$5 294	$4 348	$4 520	$3 972
WTSC-30144	30" x 144"	$3 889	$3 355	$4 869	$4 446	$5 823	$4 782	$4 972	$4 369
WTSC-3636	36" x 36"	$1 739	$1 499	$2 156	$1 947	$2 722	$2 193	$2 285	$1 897
WTSC-3648	36" x 48"	$1 913	$1 649	$2 371	$2 141	$2 994	$2 413	$2 513	$2 086
WTSC-3660	36" x 60"	$2 104	$1 813	$2 609	$2 355	$3 293	$2 654	$2 765	$2 295
WTSC-3672	36" x 72"	$2 314	$1 995	$2 869	$2 591	$3 622	$2 919	$3 041	$2 524
WTSC-3684	36" x 84"	$2 546	$2 194	$3 156	$2 850	$3 985	$3 211	$3 345	$2 777
WTSC-3696	36" x 96"	$2 800	$2 414	$3 472	$3 135	$4 383	$3 533	$3 680	$3 055
WTSC-36108	36" x 108"	$3 080	$2 655	$3 819	$3 448	$4 821	$3 886	$4 048	$3 360
WTSC-36120	36" x 120"	$3 389	$2 921	$4 201	$3 793	$5 304	$4 274	$4 452	$3 696
WTSC-36132	36" x 132"	$3 727	$3 213	$4 621	$4 173	$5 834	$4 702	$4 898	$4 066
WTSC-36144	36" x 144"	$4 100	$3 534	$5 083	$4 590	$6 417	$5 172	$5 387	$4 472
WTSC-4248	42" x 48"	$1 911	$1 911	$2 366	$2 232	$3 146	$2 516	$3 146	$2 516
WTSC-4260	42" x 60"	$2 102	$2 102	$2 603	$2 455	$3 461	$2 768	$3 461	$2 768
WTSC-4272	42" x 72"	$2 312	$2 312	$2 863	$2 701	$3 807	$3 045	$3 807	$3 045
WTSC-4284	42" x 84"	$2 543	$2 543	$3 149	$2 971	$4 187	$3 349	$4 187	$3 349
WTSC-4296	42" x 96"	$2 797	$2 797	$3 464	$3 268	$4 606	$3 684	$4 606	$3 684
WTSC-42108	42" x 108"	$3 077	$3 077	$3 811	$3 595	$5 067	$4 052	$5 067	$4 052
WTSC-42120	42" x 120"	$3 385	$3 385	$4 192	$3 954	$5 574	$4 458	$5 574	$4 458
WTSC-42132	42" x 132"	$3 723	$3 723	$4 611	$4 350	$6 131	$4 904	$6 131	$4 904
WTSC-42144	42" x 144"	$4 095	$4 095	$5 072	$4 785	$6 744	$5 394	$6 744	$5 394
WTSC-4848	48" x 48"	$1 960	$1 699	$2 520	$2 310	$3 372	$2 682	$3 372	$2 682
WTSC-4860	48" x 60"	$2 156	$1 869	$2 772	$2 541	$3 709	$2 950	$3 709	$2 950
WTSC-4872	48" x 72"	$2 371	$2 056	$3 050	$2 795	$4 080	$3 245	$4 080	$3 245
WTSC-4884	48" x 84"	$2 608	$2 262	$3 355	$3 075	$4 488	$3 569	$4 488	$3 569
WTSC-4896	48" x 96"	$2 869	$2 488	$3 690	$3 382	$4 937	$3 926	$4 937	$3 926
WTSC-48108	48" x 108"	$3 156	$2 736	$4 059	$3 720	$5 431	$4 319	$5 431	$4 319
WTSC-48120	48" x 120"	$3 472	$3 010	$4 465	$4 092	$5 974	$4 751	$5 974	$4 751
WTSC-48132	48" x 132"	$3 819	$3 311	$4 911	$4 502	$6 571	$5 226	$6 571	$5 226
WTSC-48144	48" x 144"	$4 201	$3 642	$5 403	$4 952	$7 228	$5 749	$7 228	$5 749
WTSC-5660	56" x 60"	$3 170	$2 917	$3 157	$3 083	$4 175	$2 979	$4 175	$2 979
WTSC-5672	56" x 72"	$3 487	$3 209	$3 473	$3 391	$4 593	$3 277	$4 593	$3 277
WTSC-5684	56" x 84"	$3 836	$3 530	$3 820	$3 730	$5 052	$3 605	$5 052	$3 605
WTSC-5696	56" x 96"	$4 219	$3 883	$4 202	$4 103	$5 557	$3 965	$5 557	$3 965
WTSC-56108	56" x 108"	$4 641	$4 271	$4 622	$4 513	$6 113	$4 362	$6 113	$4 362

CONSULTANT WORK TABLE (WELDED)

MODEL #	DIMENSIONS	SC	GC	SU	GU	BSC	BGC	BSU	BGU
	Width x Length	Stainless Crossbracing	Galvanized Crossbracing	Stainless Undersheld	Galvanized Undershelf	Backsplash Stainless Crossbracing	Backsplash Galvanized Crossbracing	Backsplash Stainless Undershelf	Backplash Galvanized Undershelf
WTSC-56120	56" x 120"	$5 105	$4 698	$5 084	$4 965	$6 724	$4 798	$6 724	$4 798
WTSC-56132	56" x 132"	$5 616	$5 168	$5 593	$5 461	$7 397	$5 278	$7 397	$5 278
WTSC-56144	56" x 144"	$6 178	$5 685	$6 152	$6 007	$8 136	$5 805	$8 136	$5 805

CONSULTANT WORK TABLE (KNOCKDOWN)

MODEL #	DIMENSIONS	KD-SC	KD-GC	KD-SU	KD-GU	KD-BSC	KD-BGC	KD-BSU	KD-BGU
	Width x Length	Knock Down Stainless Crossbracing	Knock Down Galvanized Crossbracing	Knock Down Stainless Undershelf	Knock Down Galvanized Undershelf	Knock Down Backsplash Stainless Crossbracing	Knock Down Backsplash Galvanized Crossbracing	Knock Down Backsplash Stainless Undershelf	Knock Down Backsplash Galvanized Undershelf
WTSC-1824	18" x 24"	$1 496	$1 286	$1 788	$1 553	$1 915	$1 573	$1 917	$1 687
WTSC-1836	18" x 36"	$1 645	$1 415	$1 967	$1 708	$2 107	$1 730	$2 109	$1 856
WTSC-1848	18" x 48"	$1 810	$1 557	$2 164	$1 879	$2 318	$1 904	$2 320	$2 042
WTSC-1860	18" x 60"	$1 991	$1 712	$2 380	$2 067	$2 549	$2 094	$2 552	$2 246
WTSC-1872	18" x 72"	$2 190	$1 884	$2 618	$2 273	$2 804	$2 303	$2 807	$2 471
WTSC-1884	18" x 84"	$2 409	$2 072	$2 880	$2 501	$3 085	$2 534	$3 087	$2 718
WTSC-1896	18" x 96"	$2 650	$2 279	$3 168	$2 751	$3 393	$2 787	$3 396	$2 989
WTSC-18108	18" x 108"	$2 915	$2 507	$3 485	$3 026	$3 732	$3 066	$3 736	$3 288
WTSC-18120	18" x 120"	$3 206	$2 758	$3 833	$3 328	$4 106	$3 372	$4 109	$3 617
WTSC-18132	18" x 132"	$3 527	$3 033	$4 216	$3 661	$4 516	$3 709	$4 520	$3 979
WTSC-18144	18" x 144"	$3 879	$3 337	$4 638	$4 027	$4 968	$4 080	$4 972	$4 377
WTSC-2424	24" x 24"	$1 518	$1 294	$1 826	$1 662	$2 072	$1 903	$1 963	$1 723
WTSC-2436	24" x 36"	$1 670	$1 423	$2 009	$1 829	$2 279	$2 093	$2 159	$1 896
WTSC-2448	24" x 48"	$1 837	$1 565	$2 210	$2 011	$2 507	$2 302	$2 375	$2 085
WTSC-2460	24" x 60"	$2 020	$1 722	$2 431	$2 213	$2 758	$2 532	$2 612	$2 294
WTSC-2472	24" x 72"	$2 222	$1 894	$2 674	$2 434	$3 033	$2 786	$2 873	$2 523
WTSC-2484	24" x 84"	$2 445	$2 083	$2 941	$2 677	$3 337	$3 064	$3 161	$2 775
WTSC-2496	24" x 96"	$2 689	$2 292	$3 235	$2 945	$3 670	$3 371	$3 477	$3 053
WTSC-24108	24" x 108"	$2 958	$2 521	$3 559	$3 239	$4 038	$3 708	$3 825	$3 358
WTSC-24120	24" x 120"	$3 254	$2 773	$3 915	$3 563	$4 441	$4 078	$4 207	$3 694
WTSC-24132	24" x 132"	$3 579	$3 050	$4 306	$3 920	$4 885	$4 486	$4 628	$4 063
WTSC-24144	24" x 144"	$3 937	$3 355	$4 737	$4 312	$5 374	$4 935	$5 090	$4 470
WTSC-3036	30" x 36"	$1 571	$1 355	$1 966	$1 796	$2 352	$1 932	$2 008	$1 765
WTSC-3048	30" x 48"	$1 728	$1 490	$2 163	$1 976	$2 587	$2 125	$2 209	$1 941
WTSC-3060	30" x 60"	$1 901	$1 640	$2 379	$2 173	$2 846	$2 337	$2 430	$2 135
WTSC-3072	30" x 72"	$2 091	$1 803	$2 617	$2 390	$3 131	$2 571	$2 673	$2 349
WTSC-3084	30" x 84"	$2 300	$1 984	$2 879	$2 629	$3 444	$2 828	$2 940	$2 584
WTSC-3096	30" x 96"	$2 530	$2 182	$3 167	$2 892	$3 788	$3 111	$3 234	$2 842
WTSC-30108	30" x 108"	$2 783	$2 400	$3 484	$3 182	$4 167	$3 422	$3 558	$3 126
WTSC-30120	30" x 120"	$3 061	$2 640	$3 832	$3 500	$4 584	$3 764	$3 913	$3 439
WTSC-30132	30" x 132"	$3 367	$2 905	$4 215	$3 850	$5 042	$4 141	$4 305	$3 783
WTSC-30144	30" x 144"	$3 704	$3 195	$4 637	$4 235	$5 546	$4 555	$4 735	$4 161
WTSC-3636	36" x 36"	$1 656	$1 427	$2 053	$1 854	$2 592	$2 089	$2 176	$1 806
WTSC-3648	36" x 48"	$1 822	$1 570	$2 259	$2 039	$2 851	$2 298	$2 394	$1 987

TABLES / **STANDARD EDGE**

CONSULTANT WORK TABLE (KNOCKDOWN)									
MODEL #	DIMENSIONS	KD-SC	KD-GC	KD-SU	KD-GU	KD-BSC	KD-BGC	KD-BSU	KD-BGU
	Width x Length	Knock Down Stainless Crossbracing	Knock Down Galvanized Crossbracing	Knock Down Stainless Undershelf	Knock Down Galvanized Undershelf	Knock Down Backsplash Stainless Crossbracing	Knock Down Backsplash Galvanized Crossbracing	Knock Down Backsplash Stainless Undershelf	Knock Down Backsplash Galvanized Undershelf
WTSC-3660	36" x 60"	$2 004	$1 727	$2 484	$2 243	$3 136	$2 528	$2 633	$2 186
WTSC-3672	36" x 72"	$2 204	$1 900	$2 733	$2 467	$3 450	$2 780	$2 896	$2 404
WTSC-3684	36" x 84"	$2 425	$2 090	$3 006	$2 714	$3 795	$3 058	$3 186	$2 645
WTSC-3696	36" x 96"	$2 667	$2 299	$3 307	$2 986	$4 174	$3 364	$3 504	$2 909
WTSC-36108	36" x 108"	$2 934	$2 529	$3 637	$3 284	$4 592	$3 701	$3 855	$3 200
WTSC-36120	36" x 120"	$3 227	$2 782	$4 001	$3 613	$5 051	$4 071	$4 240	$3 520
WTSC-36132	36" x 132"	$3 550	$3 060	$4 401	$3 974	$5 556	$4 478	$4 664	$3 872
WTSC-36144	36" x 144"	$3 905	$3 366	$4 841	$4 371	$6 112	$4 926	$5 131	$4 259
WTSC-4248	42" x 48"	$1 820	$1 820	$2 253	$2 126	$2 996	$2 396	$2 996	$2 396
WTSC-4260	42" x 60"	$2 002	$2 002	$2 479	$2 338	$3 296	$2 636	$3 296	$2 636
WTSC-4272	42" x 72"	$2 202	$2 202	$2 727	$2 572	$3 626	$2 900	$3 626	$2 900
WTSC-4284	42" x 84"	$2 422	$2 422	$2 999	$2 829	$3 988	$3 190	$3 988	$3 190
WTSC-4296	42" x 96"	$2 664	$2 664	$3 299	$3 112	$4 387	$3 509	$4 387	$3 509
WTSC-42108	42" x 108"	$2 930	$2 930	$3 629	$3 424	$4 826	$3 860	$4 826	$3 860
WTSC-42120	42" x 120"	$3 224	$3 224	$3 992	$3 766	$5 308	$4 245	$5 308	$4 245
WTSC-42132	42" x 132"	$3 546	$3 546	$4 391	$4 143	$5 839	$4 670	$5 839	$4 670
WTSC-42144	42" x 144"	$3 900	$3 900	$4 830	$4 557	$6 423	$5 137	$6 423	$5 137
WTSC-4848	48" x 48"	$1 866	$1 618	$2 400	$2 200	$3 211	$2 554	$3 211	$2 554
WTSC-4860	48" x 60"	$2 053	$1 780	$2 640	$2 420	$3 533	$2 809	$3 533	$2 809
WTSC-4872	48" x 72"	$2 258	$1 958	$2 904	$2 662	$3 886	$3 090	$3 886	$3 090
WTSC-4884	48" x 84"	$2 484	$2 154	$3 195	$2 928	$4 274	$3 399	$4 274	$3 399
WTSC-4896	48" x 96"	$2 733	$2 369	$3 514	$3 221	$4 702	$3 739	$4 702	$3 739
WTSC-48108	48" x 108"	$3 006	$2 606	$3 866	$3 543	$5 172	$4 113	$5 172	$4 113
WTSC-48120	48" x 120"	$3 307	$2 867	$4 252	$3 898	$5 689	$4 525	$5 689	$4 525
WTSC-48132	48" x 132"	$3 637	$3 153	$4 678	$4 287	$6 258	$4 977	$6 258	$4 977
WTSC-48144	48" x 144"	$4 001	$3 469	$5 145	$4 716	$6 884	$5 475	$6 884	$5 475
WTSC-5660	56" x 60"	$3 019	$2 778	$3 007	$2 936	$3 976	$2 837	$3 976	$2 837
WTSC-5672	56" x 72"	$3 321	$3 056	$3 307	$3 229	$4 374	$3 121	$4 374	$3 121
WTSC-5684	56" x 84"	$3 653	$3 362	$3 638	$3 552	$4 811	$3 433	$4 811	$3 433
WTSC-5696	56" x 96"	$4 018	$3 698	$4 002	$3 908	$5 293	$3 776	$5 293	$3 776
WTSC-56108	56" x 108"	$4 420	$4 068	$4 402	$4 298	$5 822	$4 154	$5 822	$4 154
WTSC-56120	56" x 120"	$4 862	$4 474	$4 842	$4 728	$6 404	$4 569	$6 404	$4 569
WTSC-56132	56" x 132"	$5 349	$4 922	$5 326	$5 201	$7 044	$5 026	$7 044	$5 026
WTSC-56144	56" x 144"	$5 883	$5 414	$5 859	$5 721	$7 749	$5 529	$7 749	$5 529

BUILD YOUR WORK TABLE (BULLNOSE)

(SAMPLE MODEL #) WT B E KD BSC 30 72

(WT) WORK TABLE

(B) PRODUCT SERIES : BULLNOSE DESIGN

(E) PRODUCT LINE : ECONOMY

(KD) OPTION : KNOCKDOWN VS. WELDED

(BSC) PRODUCT TYPE : BACKSPLASH STAINLESS CROSSBRACING

(30) SINK WIDTH OVERALL DIMENSION : 30” W

(72) SINK LENGTH OVERALL DIMENSION : 72” L

TABLES / **BULLNOSE EDGE**

ECONOMY WORK TABLE (WELDED)

MODEL #	DIMENSIONS	SC	GC	SU	GU	BSC	BGC	BSU	BGU
	Width x Length	Stainless Crossbracing	Galvanized Crossbracing	Stainless Undersheld	Galvanized Undershelf	Backsplash Stainless Crossbracing	Backsplash Galvanized Crossbracing	Backsplash Stainless Undershelf	Backplash Galvanized Undershelf
WTBE-1824	18" x 24"	$993	$823	$1 187	$1 031	$1 272	$1 045	$1 273	$1 121
WTBE-1836	18" x 36"	$1 045	$866	$1 250	$1 085	$1 339	$1 099	$1 340	$1 179
WTBE-1848	18" x 48"	$1 100	$912	$1 315	$1 142	$1 409	$1 157	$1 410	$1 241
WTBE-1860	18" x 60"	$1 158	$960	$1 384	$1 202	$1 483	$1 218	$1 484	$1 306
WTBE-1872	18" x 72"	$1 219	$1 010	$1 457	$1 265	$1 561	$1 282	$1 562	$1 375
WTBE-1884	18" x 84"	$1 283	$1 063	$1 534	$1 332	$1 643	$1 349	$1 644	$1 447
WTBE-1896	18" x 96"	$1 350	$1 119	$1 614	$1 402	$1 729	$1 420	$1 730	$1 523
WTBE-18108	18" x 108"	$1 421	$1 178	$1 699	$1 475	$1 820	$1 495	$1 821	$1 603
WTBE-18120	18" x 120"	$1 496	$1 240	$1 788	$1 553	$1 915	$1 573	$1 917	$1 687
WTBE-18132	18" x 132"	$1 574	$1 305	$1 882	$1 634	$2 016	$1 656	$2 018	$1 776
WTBE-18144	18" x 144"	$1 657	$1 373	$1 981	$1 720	$2 122	$1 743	$2 123	$1 869
WTBE-2424	24" x 24"	$1 008	$859	$1 213	$1 104	$1 376	$1 263	$1 303	$1 144
WTBE-2436	24" x 36"	$1 061	$904	$1 276	$1 162	$1 448	$1 330	$1 372	$1 204
WTBE-2448	24" x 48"	$1 117	$952	$1 343	$1 223	$1 524	$1 399	$1 444	$1 268
WTBE-2460	24" x 60"	$1 175	$1 002	$1 414	$1 287	$1 604	$1 473	$1 519	$1 334
WTBE-2472	24" x 72"	$1 237	$1 054	$1 488	$1 355	$1 688	$1 550	$1 599	$1 404
WTBE-2484	24" x 84"	$1 302	$1 109	$1 566	$1 426	$1 777	$1 632	$1 683	$1 478
WTBE-2496	24" x 96"	$1 370	$1 168	$1 649	$1 501	$1 870	$1 717	$1 772	$1 555

TABLES / **BULLNOSE EDGE**

ECONOMY WORK TABLE (WELDED)									
MODEL #	DIMENSIONS	SC	GC	SU	GU	BSC	BGC	BSU	BGU
	Width x Length	Stainless Crossbracing	Galvanized Crossbracing	Stainless Undersheld	Galvanized Undershelf	Backsplash Stainless Crossbracing	Backsplash Galvanized Crossbracing	Backsplash Stainless Undershelf	Backplash Galvanized Undershelf
WTBE-24108	24" x 108"	$1 442	$1 229	$1 735	$1 579	$1 968	$1 808	$1 865	$1 637
WTBE-24120	24" x 120"	$1 518	$1 293	$1 826	$1 662	$2 072	$1 902	$1 962	$1 723
WTBE-24132	24" x 132"	$1 597	$1 361	$1 922	$1 749	$2 180	$2 002	$2 065	$1 814
WTBE-24144	24" x 144"	$1 681	$1 433	$2 023	$1 841	$2 295	$2 107	$2 174	$1 909
WTBE-3036	30" x 36"	$1 043	$900	$1 306	$1 193	$1 562	$1 283	$1 333	$1 172
WTBE-3048	30" x 48"	$1 098	$954	$1 374	$1 255	$1 644	$1 350	$1 403	$1 233
WTBE-3060	30" x 60"	$1 156	$1 011	$1 446	$1 321	$1 730	$1 421	$1 477	$1 298
WTBE-3072	30" x 72"	$1 216	$1 072	$1 522	$1 390	$1 821	$1 495	$1 555	$1 366
WTBE-3084	30" x 84"	$1 280	$1 136	$1 602	$1 463	$1 917	$1 574	$1 636	$1 438
WTBE-3096	30" x 96"	$1 347	$1 204	$1 686	$1 540	$2 017	$1 657	$1 722	$1 514
WTBE-30108	30" x 108"	$1 418	$1 276	$1 775	$1 621	$2 123	$1 744	$1 813	$1 593
WTBE-30120	30" x 120"	$1 492	$1 353	$1 868	$1 706	$2 235	$1 835	$1 908	$1 677
WTBE-30132	30" x 132"	$1 571	$1 434	$1 966	$1 796	$2 352	$1 931	$2 008	$1 765
WTBE-30144	30" x 144"	$1 653	$1 520	$2 070	$1 890	$2 475	$2 033	$2 113	$1 857
WTBE-3636	36" x 36"	$1 100	$948	$1 363	$1 231	$1 721	$1 387	$1 445	$1 199
WTBE-3648	36" x 48"	$1 173	$1 011	$1 455	$1 313	$1 836	$1 480	$1 542	$1 280
WTBE-3660	36" x 60"	$1 252	$1 079	$1 552	$1 401	$1 959	$1 579	$1 645	$1 366
WTBE-3672	36" x 72"	$1 336	$1 151	$1 656	$1 495	$2 091	$1 685	$1 755	$1 457
WTBE-3684	36" x 84"	$1 425	$1 229	$1 767	$1 596	$2 231	$1 798	$1 873	$1 555
WTBE-3696	36" x 96"	$1 521	$1 311	$1 886	$1 702	$2 380	$1 918	$1 998	$1 659
WTBE-36108	36" x 108"	$1 623	$1 399	$2 012	$1 817	$2 540	$2 047	$2 132	$1 770
WTBE-36120	36" x 120"	$1 731	$1 492	$2 147	$1 938	$2 710	$2 184	$2 275	$1 889
WTBE-36132	36" x 132"	$1 847	$1 592	$2 291	$2 068	$2 892	$2 330	$2 427	$2 015
WTBE-36144	36" x 144"	$1 971	$1 699	$2 444	$2 207	$3 085	$2 487	$2 590	$2 150
WTBE-4248	42" x 48"	$1 208	$1 208	$1 496	$1 412	$1 990	$1 591	$1 990	$1 591
WTBE-4260	42" x 60"	$1 289	$1 288	$1 597	$1 506	$2 123	$1 698	$2 123	$1 698
WTBE-4272	42" x 72"	$1 376	$1 373	$1 704	$1 607	$2 265	$1 812	$2 265	$1 812
WTBE-4284	42" x 84"	$1 468	$1 464	$1 818	$1 715	$2 417	$1 933	$2 417	$1 933
WTBE-4296	42" x 96"	$1 566	$1 560	$1 940	$1 830	$2 579	$2 063	$2 579	$2 063
WTBE-42108	42" x 108"	$1 671	$1 663	$2 069	$1 952	$2 752	$2 201	$2 752	$2 201
WTBE-42120	42" x 120"	$1 783	$1 773	$2 208	$2 083	$2 936	$2 348	$2 936	$2 348
WTBE-42132	42" x 132"	$1 902	$1 890	$2 356	$2 223	$3 133	$2 506	$3 133	$2 506
WTBE-42144	42" x 144"	$2 030	$2 015	$2 514	$2 371	$3 343	$2 673	$3 343	$2 673
WTBE-4848	48" x 48"	$1 239	$1 075	$1 594	$1 461	$2 133	$1 696	$2 133	$1 696
WTBE-4860	48" x 60"	$1 322	$1 145	$1 701	$1 559	$2 275	$1 810	$2 275	$1 810
WTBE-4872	48" x 72"	$1 411	$1 221	$1 815	$1 663	$2 428	$1 931	$2 428	$1 931
WTBE-4884	48" x 84"	$1 506	$1 302	$1 936	$1 775	$2 591	$2 060	$2 591	$2 060
WTBE-4896	48" x 96"	$1 606	$1 388	$2 066	$1 894	$2 764	$2 198	$2 764	$2 198
WTBE-48108	48" x 108"	$1 714	$1 479	$2 204	$2 020	$2 949	$2 346	$2 949	$2 346
WTBE-48120	48" x 120"	$1 829	$1 577	$2 352	$2 156	$3 147	$2 503	$3 147	$2 503
WTBE-48132	48" x 132"	$1 951	$1 681	$2 510	$2 300	$3 358	$2 670	$3 358	$2 670
WTBE-48144	48" x 144"	$2 082	$1 792	$2 678	$2 454	$3 583	$2 849	$3 583	$2 849

ECONOMY WORK TABLE (WELDED)

MODEL #	DIMENSIONS	SC	GC	SU	GU	BSC	BGC	BSU	BGU
	Width x Length	Stainless Crossbracing	Galvanized Crossbracing	Stainless Undersheld	Galvanized Undershelf	Backsplash Stainless Crossbracing	Backsplash Galvanized Crossbracing	Backsplash Stainless Undershelf	Backplash Galvanized Undershelf
WTBE-5660	56" x 60"	$2 005	$1 845	$1 996	$1 950	$2 640	$1 884	$2 640	$1 884
WTBE-5672	56" x 72"	$2 145	$1 974	$2 136	$2 086	$2 825	$2 016	$2 825	$2 016
WTBE-5684	56" x 84"	$2 295	$2 112	$2 286	$2 232	$3 023	$2 157	$3 023	$2 157
WTBE-5696	56" x 96"	$2 456	$2 260	$2 446	$2 388	$3 235	$2 308	$3 235	$2 308
WTBE-56108	56" x 108"	$2 628	$2 418	$2 617	$2 555	$3 461	$2 470	$3 461	$2 470
WTBE-56120	56" x 120"	$2 812	$2 587	$2 800	$2 734	$3 703	$2 642	$3 703	$2 642
WTBE-56132	56" x 132"	$3 009	$2 769	$2 996	$2 926	$3 963	$2 827	$3 963	$2 827
WTBE-56144	56" x 144"	$3 219	$2 962	$3 206	$3 130	$4 240	$3 025	$4 240	$3 025

ECONOMY WORK TABLE (KNOCKDOWN)

MODEL #	DIMENSIONS	KD-SC	KD-GC	KD-SU	KD-GU	KD-BSC	KD-BGC	KD-BSU	KD-BGU
	Width x Length	Knock Down Stainless Crossbracing	Knock Down Galvanized Crossbracing	Knock Down Stainless Undershelf	Knock Down Galvanized Undershelf	Knock Down Backsplash Stainless Crossbracing	Knock Down Backsplash Galvanized Crossbracing	Knock Down Backsplash Stainless Undershelf	Knock Down Backsplash Galvanized Undershelf
WTBE-1824	18" x 24"	$946	$814	$1 131	$982	$1 211	$995	$1 212	$1 067
WTBE-1836	18" x 36"	$996	$856	$1 190	$1 034	$1 296	$1 065	$1 278	$1 126
WTBE-1848	18" x 48"	$1 048	$901	$1 253	$1 088	$1 387	$1 139	$1 347	$1 188
WTBE-1860	18" x 60"	$1 103	$949	$1 318	$1 145	$1 484	$1 219	$1 420	$1 253
WTBE-1872	18" x 72"	$1 161	$998	$1 388	$1 205	$1 588	$1 304	$1 496	$1 322
WTBE-1884	18" x 84"	$1 222	$1 051	$1 461	$1 268	$1 699	$1 395	$1 577	$1 395
WTBE-1896	18" x 96"	$1 286	$1 106	$1 537	$1 335	$1 818	$1 493	$1 662	$1 471
WTBE-18108	18" x 108"	$1 353	$1 164	$1 618	$1 405	$1 945	$1 598	$1 752	$1 552
WTBE-18120	18" x 120"	$1 424	$1 225	$1 703	$1 479	$2 081	$1 709	$1 847	$1 638
WTBE-18132	18" x 132"	$1 499	$1 289	$1 792	$1 556	$2 227	$1 829	$1 946	$1 728
WTBE-18144	18" x 144"	$1 578	$1 357	$1 886	$1 638	$2 383	$1 957	$2 051	$1 823
WTBE-2424	24" x 24"	$960	$818	$1 155	$1 051	$1 310	$1 203	$1 241	$1 090
WTBE-2436	24" x 36"	$1 018	$867	$1 216	$1 109	$1 409	$1 286	$1 314	$1 154
WTBE-2448	24" x 48"	$1 079	$919	$1 279	$1 170	$1 514	$1 375	$1 391	$1 221
WTBE-2460	24" x 60"	$1 143	$974	$1 347	$1 234	$1 628	$1 470	$1 473	$1 292
WTBE-2472	24" x 72"	$1 212	$1 033	$1 417	$1 302	$1 750	$1 571	$1 559	$1 368
WTBE-2484	24" x 84"	$1 285	$1 095	$1 492	$1 374	$1 881	$1 680	$1 651	$1 448
WTBE-2496	24" x 96"	$1 362	$1 160	$1 570	$1 450	$2 022	$1 796	$1 748	$1 533
WTBE-24108	24" x 108"	$1 443	$1 230	$1 652	$1 529	$2 174	$1 919	$1 850	$1 622
WTBE-24120	24" x 120"	$1 530	$1 304	$1 739	$1 613	$2 337	$2 052	$1 959	$1 717
WTBE-24132	24" x 132"	$1 622	$1 382	$1 831	$1 702	$2 512	$2 194	$2 074	$1 818
WTBE-24144	24" x 144"	$1 719	$1 465	$1 927	$1 796	$2 701	$2 345	$2 196	$1 924
WTBE-3036	30" x 36"	$993	$857	$1 244	$1 136	$1 488	$1 222	$1 270	$1 116
WTBE-3048	30" x 48"	$1 046	$902	$1 313	$1 204	$1 607	$1 319	$1 337	$1 194
WTBE-3060	30" x 60"	$1 101	$949	$1 387	$1 276	$1 735	$1 425	$1 407	$1 278
WTBE-3072	30" x 72"	$1 158	$999	$1 464	$1 353	$1 874	$1 539	$1 481	$1 367
WTBE-3084	30" x 84"	$1 219	$1 052	$1 546	$1 434	$2 024	$1 662	$1 558	$1 463
WTBE-3096	30" x 96"	$1 283	$1 107	$1 633	$1 520	$2 186	$1 795	$1 640	$1 565
WTBE-30108	30" x 108"	$1 350	$1 165	$1 724	$1 611	$2 360	$1 938	$1 726	$1 675

TABLES / **BULLNOSE EDGE**

ECONOMY WORK TABLE (KNOCKDOWN)									
MODEL #	DIMENSIONS	KD-SC	KD-GC	KD-SU	KD-GU	KD-BSC	KD-BGC	KD-BSU	KD-BGU
	Width x Length	Knock Down Stainless Crossbracing	Knock Down Galvanized Crossbracing	Knock Down Stainless Undershelf	Knock Down Galvanized Undershelf	Knock Down Backsplash Stainless Crossbracing	Knock Down Backsplash Galvanized Crossbracing	Knock Down Backsplash Stainless Undershelf	Knock Down Backsplash Galvanized Undershelf
WTBE-30120	30" x 120"	$1 421	$1 226	$1 821	$1 708	$2 549	$2 094	$1 817	$1 792
WTBE-30132	30" x 132"	$1 496	$1 290	$1 923	$1 810	$2 753	$2 261	$1 912	$1 918
WTBE-30144	30" x 144"	$1 575	$1 358	$2 031	$1 919	$2 974	$2 442	$2 013	$2 052
WTBE-3636	36" x 36"	$1 047	$903	$1 298	$1 172	$1 639	$1 321	$1 376	$1 142
WTBE-3648	36" x 48"	$1 117	$963	$1 385	$1 252	$1 772	$1 427	$1 470	$1 228
WTBE-3660	36" x 60"	$1 192	$1 028	$1 478	$1 337	$1 915	$1 541	$1 570	$1 321
WTBE-3672	36" x 72"	$1 272	$1 097	$1 577	$1 428	$2 071	$1 664	$1 676	$1 420
WTBE-3684	36" x 84"	$1 357	$1 170	$1 683	$1 525	$2 238	$1 797	$1 790	$1 527
WTBE-3696	36" x 96"	$1 448	$1 248	$1 796	$1 629	$2 420	$1 941	$1 912	$1 642
WTBE-36108	36" x 108"	$1 545	$1 332	$1 916	$1 740	$2 616	$2 096	$2 042	$1 766
WTBE-36120	36" x 120"	$1 649	$1 421	$2 044	$1 858	$2 828	$2 264	$2 181	$1 899
WTBE-36132	36" x 132"	$1 759	$1 517	$2 181	$1 984	$3 057	$2 445	$2 329	$2 042
WTBE-36144	36" x 144"	$1 877	$1 618	$2 328	$2 119	$3 304	$2 641	$2 488	$2 196
WTBE-4248	42" x 48"	$1 151	$1 151	$1 425	$1 344	$1 895	$1 516	$1 895	$1 516
WTBE-4260	42" x 60"	$1 228	$1 228	$1 521	$1 444	$2 056	$1 641	$2 056	$1 644
WTBE-4272	42" x 72"	$1 310	$1 310	$1 622	$1 551	$2 231	$1 778	$2 231	$1 784
WTBE-4284	42" x 84"	$1 398	$1 398	$1 731	$1 665	$2 420	$1 925	$2 420	$1 936
WTBE-4296	42" x 96"	$1 492	$1 492	$1 847	$1 789	$2 626	$2 085	$2 626	$2 100
WTBE-42108	42" x 108"	$1 591	$1 591	$1 971	$1 921	$2 849	$2 258	$2 849	$2 279
WTBE-42120	42" x 120"	$1 698	$1 698	$2 103	$2 063	$3 091	$2 445	$3 091	$2 473
WTBE-42132	42" x 132"	$1 812	$1 812	$2 244	$2 216	$3 354	$2 648	$3 354	$2 683
WTBE-42144	42" x 144"	$1 933	$1 933	$2 394	$2 380	$3 639	$2 868	$3 639	$2 911
WTBE-4848	48" x 48"	$1 180	$1 023	$1 518	$1 391	$2 031	$1 615	$2 031	$1 615
WTBE-4860	48" x 60"	$1 259	$1 092	$1 630	$1 497	$2 204	$1 753	$2 204	$1 753
WTBE-4872	48" x 72"	$1 344	$1 165	$1 751	$1 611	$2 391	$1 901	$2 391	$1 901
WTBE-4884	48" x 84"	$1 434	$1 243	$1 881	$1 733	$2 594	$2 063	$2 594	$2 063
WTBE-4896	48" x 96"	$1 530	$1 326	$2 020	$1 865	$2 815	$2 238	$2 815	$2 238
WTBE-48108	48" x 108"	$1 632	$1 415	$2 169	$2 007	$3 054	$2 429	$3 054	$2 429
WTBE-48120	48" x 120"	$1 742	$1 510	$2 330	$2 159	$3 313	$2 635	$3 313	$2 635
WTBE-48132	48" x 132"	$1 859	$1 611	$2 502	$2 323	$3 595	$2 859	$3 595	$2 859
WTBE-48144	48" x 144"	$1 983	$1 719	$2 687	$2 500	$3 901	$3 102	$3 901	$3 102
WTBE-5660	56" x 60"	$1 909	$1 757	$1 901	$1 857	$2 515	$1 794	$2 515	$1 794
WTBE-5672	56" x 72"	$2 043	$1 880	$2 044	$1 989	$2 746	$1 959	$2 728	$1 958
WTBE-5684	56" x 84"	$2 186	$2 012	$2 197	$2 130	$2 999	$2 140	$2 960	$2 136
WTBE-5696	56" x 96"	$2 339	$2 152	$2 362	$2 281	$3 275	$2 336	$3 212	$2 330
WTBE-56108	56" x 108"	$2 503	$2 303	$2 539	$2 443	$3 576	$2 551	$3 485	$2 542
WTBE-56120	56" x 120"	$2 678	$2 464	$2 730	$2 616	$3 905	$2 786	$3 781	$2 773
WTBE-56132	56" x 132"	$2 865	$2 637	$2 934	$2 802	$4 264	$3 042	$4 103	$3 026
WTBE-56144	56" x 144"	$3 066	$2 821	$3 154	$3 001	$4 656	$3 322	$4 451	$3 301

QUALITY WORK TABLE (WELDED)

MODEL #	DIMENSIONS	SC	GC	SU	GU	BSC	BGC	BSU	BGU
	Width x Length	Stainless Crossbracing	Galvanized Crossbracing	Stainless Undersheld	Galvanized Undershelf	Backsplash Stainless Crossbracing	Backsplash Galvanized Crossbracing	Backsplash Stainless Undershelf	Backplash Galvanized Undershelf
WTBQ-1824	18" x 24"	$1 092	$906	$1 306	$1 134	$1 399	$1 149	$1 400	$1 233
WTBQ-1836	18" x 36"	$1 150	$953	$1 375	$1 194	$1 472	$1 209	$1 474	$1 297
WTBQ-1848	18" x 48"	$1 210	$1 003	$1 447	$1 256	$1 550	$1 273	$1 551	$1 365
WTBQ-1860	18" x 60"	$1 274	$1 056	$1 523	$1 322	$1 631	$1 340	$1 633	$1 437
WTBQ-1872	18" x 72"	$1 341	$1 111	$1 603	$1 392	$1 717	$1 410	$1 718	$1 513
WTBQ-1884	18" x 84"	$1 411	$1 170	$1 687	$1 465	$1 807	$1 484	$1 809	$1 592
WTBQ-1896	18" x 96"	$1 485	$1 231	$1 775	$1 542	$1 902	$1 562	$1 904	$1 676
WTBQ-18108	18" x 108"	$1 563	$1 296	$1 869	$1 623	$2 002	$1 644	$2 003	$1 763
WTBQ-18120	18" x 120"	$1 645	$1 364	$1 967	$1 708	$2 107	$1 730	$2 109	$1 856
WTBQ-18132	18" x 132"	$1 731	$1 435	$2 070	$1 798	$2 217	$1 821	$2 219	$1 954
WTBQ-18144	18" x 144"	$1 822	$1 511	$2 179	$1 892	$2 334	$1 917	$2 336	$2 056
WTBQ-2424	24" x 24"	$1 109	$945	$1 334	$1 214	$1 513	$1 390	$1 434	$1 259
WTBQ-2436	24" x 36"	$1 167	$994	$1 404	$1 278	$1 593	$1 463	$1 509	$1 325
WTBQ-2448	24" x 48"	$1 228	$1 047	$1 478	$1 345	$1 676	$1 539	$1 588	$1 394
WTBQ-2460	24" x 60"	$1 293	$1 102	$1 555	$1 416	$1 764	$1 620	$1 671	$1 468
WTBQ-2472	24" x 72"	$1 361	$1 159	$1 637	$1 490	$1 857	$1 705	$1 759	$1 545
WTBQ-2484	24" x 84"	$1 432	$1 220	$1 723	$1 568	$1 955	$1 795	$1 852	$1 626
WTBQ-2496	24" x 96"	$1 507	$1 284	$1 813	$1 651	$2 057	$1 889	$1 949	$1 711
WTBQ-24108	24" x 108"	$1 586	$1 352	$1 909	$1 737	$2 165	$1 988	$2 051	$1 801
WTBQ-24120	24" x 120"	$1 670	$1 423	$2 009	$1 828	$2 279	$2 093	$2 159	$1 895
WTBQ-24132	24" x 132"	$1 757	$1 498	$2 114	$1 924	$2 399	$2 203	$2 272	$1 995
WTBQ-24144	24" x 144"	$1 849	$1 576	$2 225	$2 025	$2 524	$2 318	$2 391	$2 100
WTBQ-3036	30" x 36"	$1 147	$990	$1 436	$1 312	$1 718	$1 411	$1 467	$1 289
WTBQ-3048	30" x 48"	$1 208	$1 042	$1 512	$1 381	$1 808	$1 485	$1 544	$1 357
WTBQ-3060	30" x 60"	$1 271	$1 096	$1 591	$1 453	$1 903	$1 563	$1 625	$1 428
WTBQ-3072	30" x 72"	$1 338	$1 154	$1 675	$1 529	$2 003	$1 645	$1 710	$1 503
WTBQ-3084	30" x 84"	$1 408	$1 215	$1 763	$1 610	$2 108	$1 731	$1 800	$1 582
WTBQ-3096	30" x 96"	$1 482	$1 278	$1 855	$1 694	$2 219	$1 822	$1 894	$1 665
WTBQ-30108	30" x 108"	$1 560	$1 345	$1 953	$1 783	$2 335	$1 918	$1 994	$1 752
WTBQ-30120	30" x 120"	$1 642	$1 416	$2 055	$1 877	$2 458	$2 019	$2 099	$1 844
WTBQ-30132	30" x 132"	$1 728	$1 490	$2 163	$1 975	$2 587	$2 125	$2 209	$1 941
WTBQ-30144	30" x 144"	$1 819	$1 569	$2 276	$2 079	$2 723	$2 236	$2 325	$2 043
WTBQ-3636	36" x 36"	$1 210	$1 043	$1 500	$1 354	$1 893	$1 526	$1 589	$1 319
WTBQ-3648	36" x 48"	$1 291	$1 112	$1 600	$1 445	$2 020	$1 628	$1 696	$1 408
WTBQ-3660	36" x 60"	$1 377	$1 187	$1 707	$1 542	$2 155	$1 737	$1 809	$1 502
WTBQ-3672	36" x 72"	$1 469	$1 267	$1 822	$1 645	$2 300	$1 854	$1 931	$1 603
WTBQ-3684	36" x 84"	$1 568	$1 351	$1 944	$1 755	$2 454	$1 978	$2 060	$1 710
WTBQ-3696	36" x 96"	$1 673	$1 442	$2 074	$1 873	$2 618	$2 110	$2 198	$1 825
WTBQ-36108	36" x 108"	$1 785	$1 539	$2 213	$1 998	$2 794	$2 252	$2 345	$1 947
WTBQ-36120	36" x 120"	$1 905	$1 642	$2 361	$2 132	$2 981	$2 402	$2 503	$2 077
WTBQ-36132	36" x 132"	$2 032	$1 752	$2 520	$2 275	$3 181	$2 563	$2 670	$2 217
WTBQ-36144	36" x 144"	$2 168	$1 869	$2 688	$2 427	$3 394	$2 735	$2 849	$2 365
WTBQ-4248	42" x 48"	$1 329	$1 329	$1 646	$1 553	$2 189	$1 750	$2 189	$1 750
WTBQ-4260	42" x 60"	$1 418	$1 418	$1 756	$1 657	$2 335	$1 868	$2 335	$1 868

TABLES / **BULLNOSE EDGE**

QUALITY WORK TABLE (WELDED)

MODEL #	DIMENSIONS	SC	GC	SU	GU	BSC	BGC	BSU	BGU
	Width x Length	Stainless Crossbracing	Galvanized Crossbracing	Stainless Undersheld	Galvanized Undershelf	Backsplash Stainless Crossbracing	Backsplash Galvanized Crossbracing	Backsplash Stainless Undershelf	Backplash Galvanized Undershelf
WTBQ-4272	42" x 72"	$1 513	$1 513	$1 874	$1 768	$2 492	$1 993	$2 492	$1 993
WTBQ-4284	42" x 84"	$1 615	$1 615	$2 000	$1 886	$2 659	$2 126	$2 659	$2 126
WTBQ-4296	42" x 96"	$1 723	$1 723	$2 133	$2 013	$2 837	$2 269	$2 837	$2 269
WTBQ-42108	42" x 108"	$1 838	$1 838	$2 276	$2 147	$3 027	$2 421	$3 027	$2 421
WTBQ-42120	42" x 120"	$1 961	$1 961	$2 429	$2 291	$3 230	$2 583	$3 230	$2 583
WTBQ-42132	42" x 132"	$2 093	$2 093	$2 592	$2 445	$3 446	$2 756	$3 446	$2 756
WTBQ-42144	42" x 144"	$2 233	$2 233	$2 765	$2 609	$3 677	$2 941	$3 677	$2 941
WTBQ-4848	48" x 48"	$1 363	$1 182	$1 753	$1 607	$2 346	$1 866	$2 346	$1 866
WTBQ-4860	48" x 60"	$1 455	$1 261	$1 871	$1 715	$2 503	$1 991	$2 503	$1 991
WTBQ-4872	48" x 72"	$1 552	$1 346	$1 996	$1 830	$2 671	$2 124	$2 671	$2 124
WTBQ-4884	48" x 84"	$1 656	$1 436	$2 130	$1 952	$2 850	$2 266	$2 850	$2 266
WTBQ-4896	48" x 96"	$1 767	$1 532	$2 273	$2 083	$3 041	$2 418	$3 041	$2 418
WTBQ-48108	48" x 108"	$1 885	$1 635	$2 425	$2 222	$3 244	$2 580	$3 244	$2 580
WTBQ-48120	48" x 120"	$2 012	$1 744	$2 587	$2 371	$3 462	$2 753	$3 462	$2 753
WTBQ-48132	48" x 132"	$2 147	$1 861	$2 761	$2 530	$3 694	$2 937	$3 694	$2 937
WTBQ-48144	48" x 144"	$2 290	$1 986	$2 946	$2 700	$3 941	$3 134	$3 941	$3 134
WTBQ-5660	56" x 60"	$2 205	$2 029	$2 196	$2 144	$2 904	$2 072	$2 904	$2 072
WTBQ-5672	56" x 72"	$2 360	$2 171	$2 350	$2 295	$3 108	$2 217	$3 108	$2 217
WTBQ-5684	56" x 84"	$2 525	$2 323	$2 514	$2 455	$3 325	$2 373	$3 325	$2 373
WTBQ-5696	56" x 96"	$2 702	$2 486	$2 690	$2 627	$3 558	$2 539	$3 558	$2 539
WTBQ-56108	56" x 108"	$2 891	$2 660	$2 879	$2 811	$3 807	$2 716	$3 807	$2 716
WTBQ-56120	56" x 120"	$3 093	$2 846	$3 080	$3 008	$4 074	$2 907	$4 074	$2 907
WTBQ-56132	56" x 132"	$3 310	$3 045	$3 296	$3 218	$4 359	$3 110	$4 359	$3 110
WTBQ-56144	56" x 144"	$3 541	$3 259	$3 526	$3 444	$4 664	$3 328	$4 664	$3 328

QUALITY WORK TABLE (KNOCKDOWN)

MODEL #	DIMENSIONS	KD-SC	KD-GC	KD-SU	KD-GU	KD-BSC	KD-BGC	KD-BSU	KD-BGU
	Width x Length	Knock Down Stainless Crossbracing	Knock Down Galvanized Crossbracing	Knock Down Stainless Undershelf	Knock Down Galvanized Undershelf	Knock Down Backsplash Stainless Crossbracing	Knock Down Backsplash Galvanized Crossbracing	Knock Down Backsplash Stainless Undershelf	Knock Down Backsplash Galvanized Undershelf
WTBQ-1824	18" x 24"	$1 040	$895	$1 244	$1 080	$1 332	$1 094	$1 334	$1 174
WTBQ-1836	18" x 36"	$1 095	$942	$1 309	$1 137	$1 402	$1 152	$1 404	$1 236
WTBQ-1848	18" x 48"	$1 153	$991	$1 378	$1 197	$1 476	$1 212	$1 477	$1 300
WTBQ-1860	18" x 60"	$1 213	$1 043	$1 450	$1 259	$1 553	$1 276	$1 555	$1 369
WTBQ-1872	18" x 72"	$1 277	$1 098	$1 526	$1 326	$1 635	$1 343	$1 637	$1 441
WTBQ-1884	18" x 84"	$1 344	$1 156	$1 607	$1 395	$1 721	$1 413	$1 722	$1 516
WTBQ-1896	18" x 96"	$1 414	$1 217	$1 691	$1 468	$1 811	$1 488	$1 813	$1 596
WTBQ-18108	18" x 108"	$1 489	$1 280	$1 780	$1 545	$1 906	$1 566	$1 908	$1 680
WTBQ-18120	18" x 120"	$1 567	$1 348	$1 873	$1 627	$2 006	$1 648	$2 008	$1 768
WTBQ-18132	18" x 132"	$1 649	$1 418	$1 971	$1 712	$2 112	$1 734	$2 114	$1 860
WTBQ-18144	18" x 144"	$1 736	$1 493	$2 075	$1 802	$2 223	$1 826	$2 225	$1 958
WTBQ-2424	24" x 24"	$1 056	$900	$1 270	$1 156	$1 441	$1 324	$1 365	$1 199

QUALITY WORK TABLE (KNOCKDOWN)

MODEL #	DIMENSIONS	KD-SC	KD-GC	KD-SU	KD-GU	KD-BSC	KD-BGC	KD-BSU	KD-BGU
	Width x Length	Knock Down Stainless Crossbracing	Knock Down Galvanized Crossbracing	Knock Down Stainless Undershelf	Knock Down Galvanized Undershelf	Knock Down Backsplash Stainless Crossbracing	Knock Down Backsplash Galvanized Crossbracing	Knock Down Backsplash Stainless Undershelf	Knock Down Backsplash Galvanized Undershelf
WTBQ-2436	24" x 36"	$1 111	$947	$1 337	$1 217	$1 517	$1 393	$1 437	$1 262
WTBQ-2448	24" x 48"	$1 170	$997	$1 407	$1 281	$1 597	$1 466	$1 512	$1 328
WTBQ-2460	24" x 60"	$1 231	$1 049	$1 481	$1 348	$1 680	$1 543	$1 592	$1 398
WTBQ-2472	24" x 72"	$1 296	$1 104	$1 559	$1 419	$1 769	$1 624	$1 675	$1 471
WTBQ-2484	24" x 84"	$1 364	$1 162	$1 641	$1 494	$1 862	$1 709	$1 763	$1 548
WTBQ-2496	24" x 96"	$1 435	$1 223	$1 727	$1 572	$1 959	$1 799	$1 856	$1 630
WTBQ-24108	24" x 108"	$1 511	$1 287	$1 818	$1 654	$2 062	$1 894	$1 953	$1 715
WTBQ-24120	24" x 120"	$1 590	$1 355	$1 913	$1 741	$2 170	$1 993	$2 056	$1 805
WTBQ-24132	24" x 132"	$1 674	$1 426	$2 014	$1 833	$2 284	$2 098	$2 164	$1 900
WTBQ-24144	24" x 144"	$1 761	$1 501	$2 119	$1 929	$2 404	$2 208	$2 277	$2 000
WTBQ-3036	30" x 36"	$1 093	$943	$1 368	$1 249	$1 636	$1 344	$1 397	$1 228
WTBQ-3048	30" x 48"	$1 150	$992	$1 440	$1 315	$1 722	$1 414	$1 470	$1 292
WTBQ-3060	30" x 60"	$1 211	$1 044	$1 515	$1 384	$1 813	$1 488	$1 547	$1 360
WTBQ-3072	30" x 72"	$1 274	$1 099	$1 595	$1 457	$1 908	$1 567	$1 629	$1 431
WTBQ-3084	30" x 84"	$1 341	$1 157	$1 679	$1 533	$2 008	$1 649	$1 714	$1 507
WTBQ-3096	30" x 96"	$1 411	$1 217	$1 767	$1 614	$2 113	$1 735	$1 804	$1 586
WTBQ-30108	30" x 108"	$1 486	$1 281	$1 860	$1 698	$2 224	$1 827	$1 899	$1 669
WTBQ-30120	30" x 120"	$1 564	$1 349	$1 957	$1 787	$2 341	$1 922	$1 999	$1 756
WTBQ-30132	30" x 132"	$1 646	$1 419	$2 060	$1 881	$2 464	$2 023	$2 104	$1 849
WTBQ-30144	30" x 144"	$1 732	$1 494	$2 168	$1 980	$2 593	$2 130	$2 214	$1 946
WTBQ-3636	36" x 36"	$1 152	$993	$1 428	$1 290	$1 803	$1 453	$1 514	$1 257
WTBQ-3648	36" x 48"	$1 229	$1 059	$1 524	$1 376	$1 924	$1 551	$1 615	$1 341
WTBQ-3660	36" x 60"	$1 312	$1 130	$1 626	$1 468	$2 053	$1 654	$1 723	$1 431
WTBQ-3672	36" x 72"	$1 399	$1 206	$1 735	$1 567	$2 190	$1 765	$1 839	$1 526
WTBQ-3684	36" x 84"	$1 493	$1 287	$1 851	$1 672	$2 337	$1 884	$1 962	$1 629
WTBQ-3696	36" x 96"	$1 593	$1 373	$1 975	$1 784	$2 494	$2 010	$2 093	$1 738
WTBQ-36108	36" x 108"	$1 700	$1 465	$2 108	$1 903	$2 661	$2 144	$2 234	$1 854
WTBQ-36120	36" x 120"	$1 814	$1 563	$2 249	$2 031	$2 839	$2 288	$2 383	$1 979
WTBQ-36132	36" x 132"	$1 935	$1 668	$2 400	$2 167	$3 029	$2 441	$2 543	$2 111
WTBQ-36144	36" x 144"	$2 065	$1 780	$2 560	$2 312	$3 232	$2 605	$2 713	$2 253
WTBQ-4248	42" x 48"	$1 266	$1 266	$1 568	$1 479	$2 084	$1 667	$2 084	$1 667
WTBQ-4260	42" x 60"	$1 351	$1 351	$1 673	$1 578	$2 224	$1 779	$2 224	$1 779
WTBQ-4272	42" x 72"	$1 441	$1 441	$1 785	$1 684	$2 373	$1 898	$2 373	$1 898
WTBQ-4284	42" x 84"	$1 538	$1 538	$1 904	$1 796	$2 532	$2 025	$2 532	$2 025
WTBQ-4296	42" x 96"	$1 641	$1 641	$2 032	$1 917	$2 702	$2 161	$2 702	$2 161
WTBQ-42108	42" x 108"	$1 751	$1 751	$2 168	$2 045	$2 883	$2 306	$2 883	$2 306
WTBQ-42120	42" x 120"	$1 868	$1 868	$2 313	$2 182	$3 076	$2 460	$3 076	$2 460
WTBQ-42132	42" x 132"	$1 993	$1 993	$2 468	$2 328	$3 282	$2 625	$3 282	$2 625
WTBQ-42144	42" x 144"	$2 127	$2 127	$2 634	$2 484	$3 502	$2 801	$3 502	$2 801
WTBQ-4848	48" x 48"	$1 298	$1 126	$1 670	$1 530	$2 234	$1 777	$2 234	$1 777
WTBQ-4860	48" x 60"	$1 385	$1 201	$1 782	$1 633	$2 384	$1 896	$2 384	$1 896
WTBQ-4872	48" x 72"	$1 478	$1 282	$1 901	$1 742	$2 543	$2 023	$2 543	$2 023
WTBQ-4884	48" x 84"	$1 577	$1 367	$2 028	$1 859	$2 714	$2 158	$2 714	$2 158

TABLES / **BULLNOSE EDGE**

QUALITY WORK TABLE (KNOCKDOWN)

MODEL #	DIMENSIONS	KD-SC	KD-GC	KD-SU	KD-GU	KD-BSC	KD-BGC	KD-BSU	KD-BGU
	Width x Length	Knock Down Stainless Crossbracing	Knock Down Galvanized Crossbracing	Knock Down Stainless Undershelf	Knock Down Galvanized Undershelf	Knock Down Backsplash Stainless Crossbracing	Knock Down Backsplash Galvanized Crossbracing	Knock Down Backsplash Stainless Undershelf	Knock Down Backsplash Galvanized Undershelf
WTBQ-4896	48" x 96"	$1 683	$1 459	$2 164	$1 984	$2 896	$2 303	$2 896	$2 303
WTBQ-48108	48" x 108"	$1 796	$1 557	$2 309	$2 117	$3 090	$2 457	$3 090	$2 457
WTBQ-48120	48" x 120"	$1 916	$1 661	$2 464	$2 258	$3 297	$2 622	$3 297	$2 622
WTBQ-48132	48" x 132"	$2 044	$1 772	$2 629	$2 410	$3 518	$2 798	$3 518	$2 798
WTBQ-48144	48" x 144"	$2 181	$1 891	$2 805	$2 571	$3 753	$2 985	$3 753	$2 985
WTBQ-5660	56" x 60"	$2 100	$1 933	$2 091	$2 042	$2 766	$1 974	$2 766	$1 974
WTBQ-5672	56" x 72"	$2 247	$2 068	$2 238	$2 185	$2 960	$2 112	$2 960	$2 153
WTBQ-5684	56" x 84"	$2 405	$2 213	$2 395	$2 338	$3 167	$2 260	$3 167	$2 349
WTBQ-5696	56" x 96"	$2 573	$2 368	$2 562	$2 502	$3 389	$2 418	$3 389	$2 563
WTBQ-56108	56" x 108"	$2 753	$2 533	$2 742	$2 677	$3 626	$2 587	$3 626	$2 796
WTBQ-56120	56" x 120"	$2 946	$2 711	$2 933	$2 864	$3 880	$2 768	$3 880	$3 051
WTBQ-56132	56" x 132"	$3 152	$2 900	$3 139	$3 065	$4 151	$2 962	$4 151	$3 328
WTBQ-56144	56" x 144"	$3 373	$3 103	$3 358	$3 280	$4 442	$3 169	$4 442	$3 631

SPEC WORK TABLE (WELDED)

MODEL #	DIMENSIONS	SC	GC	SU	GU	BSC	BGC	BSU	BGU
	Width x Length	Stainless Crossbracing	Galvanized Crossbracing	Stainless Undersheld	Galvanized Undershelf	Backsplash Stainless Crossbracing	Backsplash Galvanized Crossbracing	Backsplash Stainless Undershelf	Backplash Galvanized Undershelf
WTBS-1824	18" x 24"	$1 256	$1 041	$1 502	$1 304	$1 609	$1 321	$1 610	$1 417
WTBS-1836	18" x 36"	$1 382	$1 145	$1 652	$1 435	$1 770	$1 454	$1 771	$1 559
WTBS-1848	18" x 48"	$1 520	$1 260	$1 817	$1 578	$1 947	$1 599	$1 949	$1 715
WTBS-1860	18" x 60"	$1 672	$1 386	$1 999	$1 736	$2 141	$1 759	$2 143	$1 887
WTBS-1872	18" x 72"	$1 839	$1 525	$2 199	$1 910	$2 356	$1 935	$2 358	$2 075
WTBS-1884	18" x 84"	$2 023	$1 677	$2 419	$2 101	$2 591	$2 128	$2 593	$2 283
WTBS-1896	18" x 96"	$2 226	$1 845	$2 661	$2 311	$2 850	$2 341	$2 853	$2 511
WTBS-18108	18" x 108"	$2 448	$2 029	$2 927	$2 542	$3 135	$2 575	$3 138	$2 762
WTBS-18120	18" x 120"	$2 693	$2 232	$3 220	$2 796	$3 449	$2 833	$3 452	$3 038
WTBS-18132	18" x 132"	$2 962	$2 455	$3 542	$3 076	$3 794	$3 116	$3 797	$3 342
WTBS-18144	18" x 144"	$3 259	$2 701	$3 896	$3 383	$4 173	$3 428	$4 177	$3 677
WTBS-2424	24" x 24"	$1 275	$1 087	$1 534	$1 396	$1 740	$1 598	$1 649	$1 448
WTBS-2436	24" x 36"	$1 403	$1 195	$1 688	$1 536	$1 914	$1 758	$1 813	$1 592
WTBS-2448	24" x 48"	$1 543	$1 315	$1 856	$1 690	$2 106	$1 934	$1 995	$1 752
WTBS-2460	24" x 60"	$1 697	$1 446	$2 042	$1 859	$2 316	$2 127	$2 194	$1 927
WTBS-2472	24" x 72"	$1 867	$1 591	$2 246	$2 044	$2 548	$2 340	$2 414	$2 119
WTBS-2484	24" x 84"	$2 053	$1 750	$2 471	$2 249	$2 803	$2 574	$2 655	$2 331
WTBS-2496	24" x 96"	$2 259	$1 925	$2 718	$2 474	$3 083	$2 831	$2 921	$2 564
WTBS-24108	24" x 108"	$2 485	$2 118	$2 990	$2 721	$3 392	$3 114	$3 213	$2 821
WTBS-24120	24" x 120"	$2 733	$2 329	$3 288	$2 993	$3 731	$3 426	$3 534	$3 103
WTBS-24132	24" x 132"	$3 006	$2 562	$3 617	$3 293	$4 104	$3 768	$3 887	$3 413
WTBS-24144	24" x 144"	$3 307	$2 818	$3 979	$3 622	$4 514	$4 145	$4 276	$3 755
WTBS-3036	30" x 36"	$1 320	$1 138	$1 652	$1 509	$1 976	$1 623	$1 687	$1 482

SPEC WORK TABLE (WELDED)

MODEL #	DIMENSIONS	SC	GC	SU	GU	BSC	BGC	BSU	BGU
	Width x Length	Stainless Crossbracing	Galvanized Crossbracing	Stainless Undersheld	Galvanized Undershelf	Backsplash Stainless Crossbracing	Backsplash Galvanized Crossbracing	Backsplash Stainless Undershelf	Backplash Galvanized Undershelf
WTBS-3048	30" x 48"	$1 452	$1 252	$1 817	$1 659	$2 173	$1 785	$1 856	$1 631
WTBS-3060	30" x 60"	$1 597	$1 377	$1 999	$1 825	$2 391	$1 963	$2 041	$1 794
WTBS-3072	30" x 72"	$1 756	$1 515	$2 199	$2 008	$2 630	$2 160	$2 245	$1 973
WTBS-3084	30" x 84"	$1 932	$1 666	$2 418	$2 209	$2 893	$2 376	$2 470	$2 170
WTBS-3096	30" x 96"	$2 125	$1 833	$2 660	$2 430	$3 182	$2 613	$2 717	$2 387
WTBS-30108	30" x 108"	$2 338	$2 016	$2 926	$2 673	$3 500	$2 874	$2 988	$2 626
WTBS-30120	30" x 120"	$2 571	$2 218	$3 219	$2 940	$3 850	$3 162	$3 287	$2 889
WTBS-30132	30" x 132"	$2 829	$2 440	$3 541	$3 234	$4 235	$3 478	$3 616	$3 178
WTBS-30144	30" x 144"	$3 111	$2 684	$3 895	$3 557	$4 659	$3 826	$3 977	$3 495
WTBS-3636	36" x 36"	$1 391	$1 199	$1 725	$1 557	$2 177	$1 755	$1 828	$1 517
WTBS-3648	36" x 48"	$1 530	$1 319	$1 897	$1 713	$2 395	$1 930	$2 011	$1 669
WTBS-3660	36" x 60"	$1 683	$1 451	$2 087	$1 884	$2 634	$2 123	$2 212	$1 836
WTBS-3672	36" x 72"	$1 852	$1 596	$2 296	$2 073	$2 898	$2 336	$2 433	$2 020
WTBS-3684	36" x 84"	$2 037	$1 755	$2 525	$2 280	$3 188	$2 569	$2 676	$2 222
WTBS-3696	36" x 96"	$2 240	$1 931	$2 778	$2 508	$3 506	$2 826	$2 944	$2 444
WTBS-36108	36" x 108"	$2 464	$2 124	$3 055	$2 759	$3 857	$3 109	$3 238	$2 688
WTBS-36120	36" x 120"	$2 711	$2 336	$3 361	$3 035	$4 243	$3 419	$3 562	$2 957
WTBS-36132	36" x 132"	$2 982	$2 570	$3 697	$3 338	$4 667	$3 761	$3 918	$3 253
WTBS-36144	36" x 144"	$3 280	$2 827	$4 067	$3 672	$5 134	$4 138	$4 310	$3 578
WTBS-4248	42" x 48"	$1 528	$1 528	$1 893	$1 786	$2 517	$2 013	$2 517	$2 013
WTBS-4260	42" x 60"	$1 681	$1 681	$2 082	$1 964	$2 769	$2 214	$2 769	$2 214
WTBS-4272	42" x 72"	$1 849	$1 849	$2 290	$2 161	$3 045	$2 436	$3 045	$2 436
WTBS-4284	42" x 84"	$2 034	$2 034	$2 519	$2 377	$3 350	$2 679	$3 350	$2 679
WTBS-4296	42" x 96"	$2 238	$2 238	$2 771	$2 614	$3 685	$2 947	$3 685	$2 947
WTBS-42108	42" x 108"	$2 462	$2 462	$3 049	$2 876	$4 053	$3 242	$4 053	$3 242
WTBS-42120	42" x 120"	$2 708	$2 708	$3 353	$3 163	$4 459	$3 566	$4 459	$3 566
WTBS-42132	42" x 132"	$2 979	$2 979	$3 689	$3 480	$4 905	$3 923	$4 905	$3 923
WTBS-42144	42" x 144"	$3 276	$3 276	$4 058	$3 828	$5 395	$4 315	$5 395	$4 315
WTBS-4848	48" x 48"	$1 568	$1 359	$2 016	$1 848	$2 698	$2 145	$2 698	$2 145
WTBS-4860	48" x 60"	$1 725	$1 495	$2 218	$2 033	$2 967	$2 360	$2 967	$2 360
WTBS-4872	48" x 72"	$1 897	$1 645	$2 440	$2 236	$3 264	$2 596	$3 264	$2 596
WTBS-4884	48" x 84"	$2 087	$1 809	$2 684	$2 460	$3 591	$2 856	$3 591	$2 856
WTBS-4896	48" x 96"	$2 295	$1 990	$2 952	$2 706	$3 950	$3 141	$3 950	$3 141
WTBS-48108	48" x 108"	$2 525	$2 189	$3 247	$2 976	$4 345	$3 455	$4 345	$3 455
WTBS-48120	48" x 120"	$2 777	$2 408	$3 572	$3 274	$4 779	$3 801	$4 779	$3 801
WTBS-48132	48" x 132"	$3 055	$2 649	$3 929	$3 601	$5 257	$4 181	$5 257	$4 181
WTBS-48144	48" x 144"	$3 361	$2 914	$4 322	$3 961	$5 783	$4 599	$5 783	$4 599
WTBS-5660	56" x 60"	$2 536	$2 334	$2 525	$2 466	$3 340	$2 383	$3 340	$2 383
WTBS-5672	56" x 72"	$2 790	$2 567	$2 778	$2 713	$3 674	$2 622	$3 674	$2 622
WTBS-5684	56" x 84"	$3 069	$2 824	$3 056	$2 984	$4 042	$2 884	$4 042	$2 884
WTBS-5696	56" x 96"	$3 375	$3 106	$3 361	$3 282	$4 446	$3 172	$4 446	$3 172
WTBS-56108	56" x 108"	$3 713	$3 417	$3 698	$3 611	$4 890	$3 489	$4 890	$3 489
WTBS-56120	56" x 120"	$4 084	$3 758	$4 067	$3 972	$5 379	$3 838	$5 379	$3 838
WTBS-56132	56" x 132"	$4 493	$4 134	$4 474	$4 369	$5 917	$4 222	$5 917	$4 222
WTBS-56144	56" x 144"	$4 942	$4 548	$4 921	$4 806	$6 509	$4 644	$6 509	$4 644

TABLES / **BULLNOSE EDGE**

SPEC WORK TABLE (KNOCKDOWN)									
MODEL #	DIMENSIONS	KD-SC	KD-GC	KD-SU	KD-GU	KD-BSC	KD-BGC	KD-BSU	KD-BGU
	Width x Length	Knock Down Stainless Crossbracing	Knock Down Galvanized Crossbracing	Knock Down Stainless Undershelf	Knock Down Galvanized Undershelf	Knock Down Backsplash Stainless Crossbracing	Knock Down Backsplash Galvanized Crossbracing	Knock Down Backsplash Stainless Undershelf	Knock Down Backsplash Galvanized Undershelf
WTBS-1824	18" x 24"	$1 197	$1 029	$1 431	$1 242	$1 532	$1 259	$1 534	$1 350
WTBS-1836	18" x 36"	$1 316	$1 132	$1 574	$1 366	$1 686	$1 384	$1 687	$1 485
WTBS-1848	18" x 48"	$1 448	$1 245	$1 731	$1 503	$1 854	$1 523	$1 856	$1 633
WTBS-1860	18" x 60"	$1 593	$1 370	$1 904	$1 653	$2 039	$1 675	$2 041	$1 797
WTBS-1872	18" x 72"	$1 752	$1 507	$2 094	$1 819	$2 243	$1 843	$2 245	$1 977
WTBS-1884	18" x 84"	$1 927	$1 658	$2 304	$2 001	$2 468	$2 027	$2 470	$2 174
WTBS-1896	18" x 96"	$2 120	$1 823	$2 534	$2 201	$2 715	$2 230	$2 717	$2 392
WTBS-18108	18" x 108"	$2 332	$2 006	$2 788	$2 421	$2 986	$2 453	$2 989	$2 631
WTBS-18120	18" x 120"	$2 565	$2 206	$3 066	$2 663	$3 285	$2 698	$3 288	$2 894
WTBS-18132	18" x 132"	$2 821	$2 427	$3 373	$2 929	$3 613	$2 968	$3 616	$3 183
WTBS-18144	18" x 144"	$3 104	$2 669	$3 710	$3 222	$3 974	$3 264	$3 978	$3 501
WTBS-2424	24" x 24"	$1 214	$1 035	$1 461	$1 330	$1 658	$1 522	$1 570	$1 379
WTBS-2436	24" x 36"	$1 336	$1 138	$1 607	$1 463	$1 823	$1 674	$1 727	$1 516
WTBS-2448	24" x 48"	$1 469	$1 252	$1 768	$1 609	$2 006	$1 842	$1 900	$1 668
WTBS-2460	24" x 60"	$1 616	$1 377	$1 945	$1 770	$2 206	$2 026	$2 090	$1 835
WTBS-2472	24" x 72"	$1 778	$1 515	$2 139	$1 947	$2 427	$2 228	$2 299	$2 018
WTBS-2484	24" x 84"	$1 956	$1 667	$2 353	$2 142	$2 669	$2 451	$2 529	$2 220
WTBS-2496	24" x 96"	$2 151	$1 833	$2 588	$2 356	$2 936	$2 696	$2 781	$2 442
WTBS-24108	24" x 108"	$2 366	$2 017	$2 847	$2 592	$3 230	$2 966	$3 060	$2 686
WTBS-24120	24" x 120"	$2 603	$2 218	$3 132	$2 851	$3 553	$3 263	$3 366	$2 955
WTBS-24132	24" x 132"	$2 863	$2 440	$3 445	$3 136	$3 908	$3 589	$3 702	$3 251
WTBS-24144	24" x 144"	$3 150	$2 684	$3 790	$3 449	$4 299	$3 948	$4 072	$3 576
WTBS-3036	30" x 36"	$1 257	$1 084	$1 573	$1 437	$1 882	$1 545	$1 606	$1 412
WTBS-3048	30" x 48"	$1 382	$1 192	$1 730	$1 580	$2 070	$1 700	$1 767	$1 553
WTBS-3060	30" x 60"	$1 521	$1 312	$1 904	$1 738	$2 277	$1 870	$1 944	$1 708
WTBS-3072	30" x 72"	$1 673	$1 443	$2 094	$1 912	$2 505	$2 057	$2 138	$1 879
WTBS-3084	30" x 84"	$1 840	$1 587	$2 303	$2 104	$2 755	$2 262	$2 352	$2 067
WTBS-3096	30" x 96"	$2 024	$1 746	$2 534	$2 314	$3 030	$2 489	$2 587	$2 274
WTBS-30108	30" x 108"	$2 226	$1 920	$2 787	$2 545	$3 334	$2 738	$2 846	$2 501
WTBS-30120	30" x 120"	$2 449	$2 112	$3 066	$2 800	$3 667	$3 011	$3 131	$2 751
WTBS-30132	30" x 132"	$2 694	$2 324	$3 372	$3 080	$4 034	$3 312	$3 444	$3 026
WTBS-30144	30" x 144"	$2 963	$2 556	$3 709	$3 388	$4 437	$3 644	$3 788	$3 329
WTBS-3636	36" x 36"	$1 325	$1 142	$1 643	$1 483	$2 074	$1 671	$1 741	$1 445
WTBS-3648	36" x 48"	$1 457	$1 256	$1 807	$1 631	$2 281	$1 838	$1 915	$1 590
WTBS-3660	36" x 60"	$1 603	$1 382	$1 988	$1 795	$2 509	$2 022	$2 106	$1 749
WTBS-3672	36" x 72"	$1 763	$1 520	$2 186	$1 974	$2 760	$2 224	$2 317	$1 923
WTBS-3684	36" x 84"	$1 940	$1 672	$2 405	$2 171	$3 036	$2 447	$2 549	$2 116
WTBS-3696	36" x 96"	$2 134	$1 839	$2 645	$2 388	$3 339	$2 691	$2 803	$2 327
WTBS-36108	36" x 108"	$2 347	$2 023	$2 910	$2 627	$3 673	$2 961	$3 084	$2 560
WTBS-36120	36" x 120"	$2 582	$2 225	$3 201	$2 890	$4 041	$3 257	$3 392	$2 816
WTBS-36132	36" x 132"	$2 840	$2 448	$3 521	$3 179	$4 445	$3 582	$3 731	$3 098
WTBS-36144	36" x 144"	$3 124	$2 692	$3 873	$3 497	$4 889	$3 941	$4 105	$3 407

SPEC WORK TABLE (KNOCKDOWN)

MODEL #	DIMENSIONS	KD-SC	KD-GC	KD-SU	KD-GU	KD-BSC	KD-BGC	KD-BSU	KD-BGU
	Width x Length	Knock Down Stainless Crossbracing	Knock Down Galvanized Crossbracing	Knock Down Stainless Undershelf	Knock Down Galvanized Undershelf	Knock Down Backsplash Stainless Crossbracing	Knock Down Backsplash Galvanized Crossbracing	Knock Down Backsplash Stainless Undershelf	Knock Down Backsplash Galvanized Undershelf
WTBS-4248	42" x 48"	$1 456	$1 456	$1 803	$1 701	$2 397	$1 917	$2 397	$1 917
WTBS-4260	42" x 60"	$1 601	$1 601	$1 983	$1 871	$2 637	$2 109	$2 637	$2 109
WTBS-4272	42" x 72"	$1 761	$1 761	$2 181	$2 058	$2 900	$2 320	$2 900	$2 320
WTBS-4284	42" x 84"	$1 937	$1 937	$2 399	$2 264	$3 190	$2 552	$3 190	$2 552
WTBS-4296	42" x 96"	$2 131	$2 131	$2 639	$2 490	$3 510	$2 807	$3 510	$2 807
WTBS-42108	42" x 108"	$2 344	$2 344	$2 903	$2 739	$3 860	$3 088	$3 860	$3 088
WTBS-42120	42" x 120"	$2 579	$2 579	$3 194	$3 013	$4 247	$3 396	$4 247	$3 396
WTBS-42132	42" x 132"	$2 837	$2 837	$3 513	$3 314	$4 671	$3 736	$4 671	$3 736
WTBS-42144	42" x 144"	$3 120	$3 120	$3 864	$3 645	$5 138	$4 110	$5 138	$4 110
WTBS-4848	48" x 48"	$1 493	$1 295	$1 920	$1 760	$2 569	$2 043	$2 569	$2 043
WTBS-4860	48" x 60"	$1 642	$1 424	$2 112	$1 936	$2 826	$2 248	$2 826	$2 248
WTBS-4872	48" x 72"	$1 807	$1 566	$2 324	$2 130	$3 109	$2 472	$3 109	$2 472
WTBS-4884	48" x 84"	$1 987	$1 723	$2 556	$2 343	$3 420	$2 720	$3 420	$2 720
WTBS-4896	48" x 96"	$2 186	$1 895	$2 811	$2 577	$3 762	$2 992	$3 762	$2 992
WTBS-48108	48" x 108"	$2 405	$2 085	$3 093	$2 835	$4 138	$3 291	$4 138	$3 291
WTBS-48120	48" x 120"	$2 645	$2 293	$3 402	$3 118	$4 551	$3 620	$4 551	$3 620
WTBS-48132	48" x 132"	$2 910	$2 523	$3 742	$3 430	$5 007	$3 982	$5 007	$3 982
WTBS-48144	48" x 144"	$3 201	$2 775	$4 116	$3 773	$5 507	$4 380	$5 507	$4 380
WTBS-5660	56" x 60"	$2 415	$2 223	$2 405	$2 349	$3 181	$2 270	$3 181	$2 270
WTBS-5672	56" x 72"	$2 657	$2 445	$2 646	$2 584	$3 499	$2 497	$3 499	$2 497
WTBS-5684	56" x 84"	$2 923	$2 689	$2 910	$2 842	$3 849	$2 746	$3 849	$2 746
WTBS-5696	56" x 96"	$3 215	$2 958	$3 201	$3 126	$4 234	$3 021	$4 234	$3 021
WTBS-56108	56" x 108"	$3 536	$3 254	$3 521	$3 439	$4 657	$3 323	$4 657	$3 323
WTBS-56120	56" x 120"	$3 890	$3 579	$3 874	$3 783	$5 123	$3 655	$5 123	$3 655
WTBS-56132	56" x 132"	$4 279	$3 937	$4 261	$4 161	$5 636	$4 021	$5 636	$4 021
WTBS-56144	56" x 144"	$4 707	$4 331	$4 687	$4 577	$6 199	$4 423	$6 199	$4 423

CONSULTANT WORK TABLE (WELDED)

MODEL #	DIMENSIONS	SC	GC	SU	GU	BSC	BGC	BSU	BGU
	Width x Length	Stainless Crossbracing	Galvanized Crossbracing	Stainless Undersheld	Galvanized Undershelf	Backsplash Stainless Crossbracing	Backsplash Galvanized Crossbracing	Backsplash Stainless Undershelf	Backplash Galvanized Undershelf
WTBC-1824	18" x 24"	$1 570	$1 302	$1 878	$1 630	$2 011	$1 652	$2 013	$1 772
WTBC-1836	18" x 36"	$1 728	$1 432	$2 065	$1 793	$2 212	$1 817	$2 214	$1 949
WTBC-1848	18" x 48"	$1 900	$1 575	$2 272	$1 973	$2 433	$1 999	$2 436	$2 144
WTBC-1860	18" x 60"	$2 090	$1 733	$2 499	$2 170	$2 677	$2 199	$2 679	$2 358
WTBC-1872	18" x 72"	$2 299	$1 906	$2 749	$2 387	$2 944	$2 418	$2 947	$2 594
WTBC-1884	18" x 84"	$2 529	$2 096	$3 024	$2 626	$3 239	$2 660	$3 242	$2 854
WTBC-1896	18" x 96"	$2 782	$2 306	$3 326	$2 888	$3 563	$2 926	$3 566	$3 139
WTBC-18108	18" x 108"	$3 060	$2 537	$3 659	$3 177	$3 919	$3 219	$3 923	$3 453
WTBC-18120	18" x 120"	$3 366	$2 790	$4 025	$3 495	$4 311	$3 541	$4 315	$3 798
WTBC-18132	18" x 132"	$3 703	$3 069	$4 427	$3 844	$4 742	$3 895	$4 746	$4 178
WTBC-18144	18" x 144"	$4 073	$3 376	$4 870	$4 229	$5 216	$4 284	$5 221	$4 596
WTBC-2424	24" x 24"	$1 594	$1 358	$1 918	$1 745	$2 175	$1 998	$2 061	$1 809

TABLES / **BULLNOSE EDGE**

CONSULTANT WORK TABLE (WELDED)									
MODEL #	DIMENSIONS	SC	GC	SU	GU	BSC	BGC	BSU	BGU
	Width x Length	Stainless Crossbracing	Galvanized Crossbracing	Stainless Undersheld	Galvanized Undershelf	Backsplash Stainless Crossbracing	Backsplash Galvanized Crossbracing	Backsplash Stainless Undershelf	Backplash Galvanized Undershelf
WTBC-2436	24" x 36"	$1 753	$1 494	$2 109	$1 920	$2 393	$2 197	$2 267	$1 990
WTBC-2448	24" x 48"	$1 928	$1 644	$2 320	$2 112	$2 632	$2 417	$2 493	$2 189
WTBC-2460	24" x 60"	$2 121	$1 808	$2 552	$2 323	$2 896	$2 659	$2 743	$2 408
WTBC-2472	24" x 72"	$2 333	$1 989	$2 808	$2 556	$3 185	$2 925	$3 017	$2 649
WTBC-2484	24" x 84"	$2 567	$2 188	$3 088	$2 811	$3 504	$3 217	$3 319	$2 914
WTBC-2496	24" x 96"	$2 823	$2 406	$3 397	$3 092	$3 854	$3 539	$3 651	$3 205
WTBC-24108	24" x 108"	$3 106	$2 647	$3 737	$3 401	$4 239	$3 893	$4 016	$3 526
WTBC-24120	24" x 120"	$3 416	$2 912	$4 111	$3 742	$4 663	$4 282	$4 417	$3 879
WTBC-24132	24" x 132"	$3 758	$3 203	$4 522	$4 116	$5 130	$4 710	$4 859	$4 266
WTBC-24144	24" x 144"	$4 134	$3 523	$4 974	$4 527	$5 643	$5 182	$5 345	$4 693
WTBC-3036	30" x 36"	$1 649	$1 423	$2 065	$1 886	$2 470	$2 028	$2 109	$1 853
WTBC-3048	30" x 48"	$1 814	$1 565	$2 271	$2 074	$2 717	$2 231	$2 319	$2 038
WTBC-3060	30" x 60"	$1 996	$1 722	$2 498	$2 282	$2 988	$2 454	$2 551	$2 242
WTBC-3072	30" x 72"	$2 195	$1 894	$2 748	$2 510	$3 287	$2 699	$2 806	$2 466
WTBC-3084	30" x 84"	$2 415	$2 083	$3 023	$2 761	$3 616	$2 969	$3 087	$2 713
WTBC-3096	30" x 96"	$2 656	$2 291	$3 325	$3 037	$3 978	$3 266	$3 396	$2 984
WTBC-30108	30" x 108"	$2 922	$2 520	$3 658	$3 341	$4 375	$3 593	$3 735	$3 283
WTBC-30120	30" x 120"	$3 214	$2 773	$4 024	$3 675	$4 813	$3 952	$4 109	$3 611
WTBC-30132	30" x 132"	$3 536	$3 050	$4 426	$4 042	$5 294	$4 348	$4 520	$3 972
WTBC-30144	30" x 144"	$3 889	$3 355	$4 869	$4 446	$5 823	$4 782	$4 972	$4 369
WTBC-3636	36" x 36"	$1 739	$1 499	$2 156	$1 947	$2 722	$2 193	$2 285	$1 897
WTBC-3648	36" x 48"	$1 913	$1 649	$2 371	$2 141	$2 994	$2 413	$2 513	$2 086
WTBC-3660	36" x 60"	$2 104	$1 813	$2 609	$2 355	$3 293	$2 654	$2 765	$2 295
WTBC-3672	36" x 72"	$2 314	$1 995	$2 869	$2 591	$3 622	$2 919	$3 041	$2 524
WTBC-3684	36" x 84"	$2 546	$2 194	$3 156	$2 850	$3 985	$3 211	$3 345	$2 777
WTBC-3696	36" x 96"	$2 800	$2 414	$3 472	$3 135	$4 383	$3 533	$3 680	$3 055
WTBC-36108	36" x 108"	$3 080	$2 655	$3 819	$3 448	$4 821	$3 886	$4 048	$3 360
WTBC-36120	36" x 120"	$3 389	$2 921	$4 201	$3 793	$5 304	$4 274	$4 452	$3 696
WTBC-36132	36" x 132"	$3 727	$3 213	$4 621	$4 173	$5 834	$4 702	$4 898	$4 066
WTBC-36144	36" x 144"	$4 100	$3 534	$5 083	$4 590	$6 417	$5 172	$5 387	$4 472
WTBC-4248	42" x 48"	$1 911	$1 911	$2 366	$2 232	$3 146	$2 516	$3 146	$2 516
WTBC-4260	42" x 60"	$2 102	$2 102	$2 603	$2 455	$3 461	$2 768	$3 461	$2 768
WTBC-4272	42" x 72"	$2 312	$2 312	$2 863	$2 701	$3 807	$3 045	$3 807	$3 045
WTBC-4284	42" x 84"	$2 543	$2 543	$3 149	$2 971	$4 187	$3 349	$4 187	$3 349
WTBC-4296	42" x 96"	$2 797	$2 797	$3 464	$3 268	$4 606	$3 684	$4 606	$3 684
WTBC-42108	42" x 108"	$3 077	$3 077	$3 811	$3 595	$5 067	$4 052	$5 067	$4 052
WTBC-42120	42" x 120"	$3 385	$3 385	$4 192	$3 954	$5 574	$4 458	$5 574	$4 458
WTBC-42132	42" x 132"	$3 723	$3 723	$4 611	$4 350	$6 131	$4 904	$6 131	$4 904
WTBC-42144	42" x 144"	$4 095	$4 095	$5 072	$4 785	$6 744	$5 394	$6 744	$5 394
WTBC-4848	48" x 48"	$1 960	$1 699	$2 520	$2 310	$3 372	$2 682	$3 372	$2 682
WTBC-4860	48" x 60"	$2 156	$1 869	$2 772	$2 541	$3 709	$2 950	$3 709	$2 950
WTBC-4872	48" x 72"	$2 371	$2 056	$3 050	$2 795	$4 080	$3 245	$4 080	$3 245
WTBC-4884	48" x 84"	$2 608	$2 262	$3 355	$3 075	$4 488	$3 569	$4 488	$3 569

CONSULTANT WORK TABLE (WELDED)

MODEL #	DIMENSIONS	SC	GC	SU	GU	BSC	BGC	BSU	BGU
	Width x Length	Stainless Crossbracing	Galvanized Crossbracing	Stainless Undersheld	Galvanized Undershelf	Backsplash Stainless Crossbracing	Backsplash Galvanized Crossbracing	Backsplash Stainless Undershelf	Backplash Galvanized Undershelf
WTBC-4896	48" x 96"	$2 869	$2 488	$3 690	$3 382	$4 937	$3 926	$4 937	$3 926
WTBC-48108	48" x 108"	$3 156	$2 736	$4 059	$3 720	$5 431	$4 319	$5 431	$4 319
WTBC-48120	48" x 120"	$3 472	$3 010	$4 465	$4 092	$5 974	$4 751	$5 974	$4 751
WTBC-48132	48" x 132"	$3 819	$3 311	$4 911	$4 502	$6 571	$5 226	$6 571	$5 226
WTBC-48144	48" x 144"	$4 201	$3 642	$5 403	$4 952	$7 228	$5 749	$7 228	$5 749
WTBC-5660	56" x 60"	$3 170	$2 917	$3 157	$3 083	$4 175	$2 979	$4 175	$2 979
WTBC-5672	56" x 72"	$3 487	$3 209	$3 473	$3 391	$4 593	$3 277	$4 593	$3 277
WTBC-5684	56" x 84"	$3 836	$3 530	$3 820	$3 730	$5 052	$3 605	$5 052	$3 605
WTBC-5696	56" x 96"	$4 219	$3 883	$4 202	$4 103	$5 557	$3 965	$5 557	$3 965
WTBC-56108	56" x 108"	$4 641	$4 271	$4 622	$4 513	$6 113	$4 362	$6 113	$4 362
WTBC-56120	56" x 120"	$5 105	$4 698	$5 084	$4 965	$6 724	$4 798	$6 724	$4 798
WTBC-56132	56" x 132"	$5 616	$5 168	$5 593	$5 461	$7 397	$5 278	$7 397	$5 278
WTBC-56144	56" x 144"	$6 178	$5 685	$6 152	$6 007	$8 136	$5 805	$8 136	$5 805

CONSULTANT WORK TABLE (KNOCKDOWN)

MODEL #	DIMENSIONS	KD-SC	KD-GC	KD-SU	KD-GU	KD-BSC	KD-BGC	KD-BSU	KD-BGU
	Width x Length	Knock Down Stainless Crossbracing	Knock Down Galvanized Crossbracing	Knock Down Stainless Undershelf	Knock Down Galvanized Undershelf	Knock Down Backsplash Stainless Crossbracing	Knock Down Backsplash Galvanized Crossbracing	Knock Down Backsplash Stainless Undershelf	Knock Down Backsplash Galvanized Undershelf
WTBC-1824	18" x 24"	$1 496	$1 286	$1 788	$1 553	$1 915	$1 573	$1 917	$1 687
WTBC-1836	18" x 36"	$1 645	$1 415	$1 967	$1 708	$2 107	$1 730	$2 109	$1 856
WTBC-1848	18" x 48"	$1 810	$1 557	$2 164	$1 879	$2 318	$1 904	$2 320	$2 042
WTBC-1860	18" x 60"	$1 991	$1 712	$2 380	$2 067	$2 549	$2 094	$2 552	$2 246
WTBC-1872	18" x 72"	$2 190	$1 884	$2 618	$2 273	$2 804	$2 303	$2 807	$2 471
WTBC-1884	18" x 84"	$2 409	$2 072	$2 880	$2 501	$3 085	$2 534	$3 087	$2 718
WTBC-1896	18" x 96"	$2 650	$2 279	$3 168	$2 751	$3 393	$2 787	$3 396	$2 989
WTBC-18108	18" x 108"	$2 915	$2 507	$3 485	$3 026	$3 732	$3 066	$3 736	$3 288
WTBC-18120	18" x 120"	$3 206	$2 758	$3 833	$3 328	$4 106	$3 372	$4 109	$3 617
WTBC-18132	18" x 132"	$3 527	$3 033	$4 216	$3 661	$4 516	$3 709	$4 520	$3 979
WTBC-18144	18" x 144"	$3 879	$3 337	$4 638	$4 027	$4 968	$4 080	$4 972	$4 377
WTBC-2424	24" x 24"	$1 518	$1 294	$1 826	$1 662	$2 072	$1 903	$1 963	$1 723
WTBC-2436	24" x 36"	$1 670	$1 423	$2 009	$1 829	$2 279	$2 093	$2 159	$1 896
WTBC-2448	24" x 48"	$1 837	$1 565	$2 210	$2 011	$2 507	$2 302	$2 375	$2 085
WTBC-2460	24" x 60"	$2 020	$1 722	$2 431	$2 213	$2 758	$2 532	$2 612	$2 294
WTBC-2472	24" x 72"	$2 222	$1 894	$2 674	$2 434	$3 033	$2 786	$2 873	$2 523
WTBC-2484	24" x 84"	$2 445	$2 083	$2 941	$2 677	$3 337	$3 064	$3 161	$2 775
WTBC-2496	24" x 96"	$2 689	$2 292	$3 235	$2 945	$3 670	$3 371	$3 477	$3 053
WTBC-24108	24" x 108"	$2 958	$2 521	$3 559	$3 239	$4 038	$3 708	$3 825	$3 358
WTBC-24120	24" x 120"	$3 254	$2 773	$3 915	$3 563	$4 441	$4 078	$4 207	$3 694
WTBC-24132	24" x 132"	$3 579	$3 050	$4 306	$3 920	$4 885	$4 486	$4 628	$4 063
WTBC-24144	24" x 144"	$3 937	$3 355	$4 737	$4 312	$5 374	$4 935	$5 090	$4 470
WTBC-3036	30" x 36"	$1 571	$1 355	$1 966	$1 796	$2 352	$1 932	$2 008	$1 765
WTBC-3048	30" x 48"	$1 728	$1 490	$2 163	$1 976	$2 587	$2 125	$2 209	$1 941
WTBC-56132	56" x 132"	$5 349	$4 922	$5 326	$5 201	$7 044	$5 026	$7 044	$5 026
WTBC-56144	56" x 144"	$5 883	$5 414	$5 859	$5 721	$7 749	$5 529	$7 749	$5 529

TABLES / **BULLNOSE EDGE**

CONSULTANT WORK TABLE (KNOCKDOWN)									
MODEL #	DIMENSIONS	KD-SC	KD-GC	KD-SU	KD-GU	KD-BSC	KD-BGC	KD-BSU	KD-BGU
	Width x Length	Knock Down Stainless Crossbracing	Knock Down Galvanized Crossbracing	Knock Down Stainless Undershelf	Knock Down Galvanized Undershelf	Knock Down Backsplash Stainless Crossbracing	Knock Down Backsplash Galvanized Crossbracing	Knock Down Backsplash Stainless Undershelf	Knock Down Backsplash Galvanized Undershelf
WTBC-3060	30" x 60"	$1 901	$1 640	$2 379	$2 173	$2 846	$2 337	$2 430	$2 135
WTBC-3072	30" x 72"	$2 091	$1 803	$2 617	$2 390	$3 131	$2 571	$2 673	$2 349
WTBC-3084	30" x 84"	$2 300	$1 984	$2 879	$2 629	$3 444	$2 828	$2 940	$2 584
WTBC-3096	30" x 96"	$2 530	$2 182	$3 167	$2 892	$3 788	$3 111	$3 234	$2 842
WTBC-30108	30" x 108"	$2 783	$2 400	$3 484	$3 182	$4 167	$3 422	$3 558	$3 126
WTBC-30120	30" x 120"	$3 061	$2 640	$3 832	$3 500	$4 584	$3 764	$3 913	$3 439
WTBC-30132	30" x 132"	$3 367	$2 905	$4 215	$3 850	$5 042	$4 141	$4 305	$3 783
WTBC-30144	30" x 144"	$3 704	$3 195	$4 637	$4 235	$5 546	$4 555	$4 735	$4 161
WTBC-3636	36" x 36"	$1 656	$1 427	$2 053	$1 854	$2 592	$2 089	$2 176	$1 806
WTBC-3648	36" x 48"	$1 822	$1 570	$2 259	$2 039	$2 851	$2 298	$2 394	$1 987
WTBC-3660	36" x 60"	$2 004	$1 727	$2 484	$2 243	$3 136	$2 528	$2 633	$2 186
WTBC-3672	36" x 72"	$2 204	$1 900	$2 733	$2 467	$3 450	$2 780	$2 896	$2 404
WTBC-3684	36" x 84"	$2 425	$2 090	$3 006	$2 714	$3 795	$3 058	$3 186	$2 645
WTBC-3696	36" x 96"	$2 667	$2 299	$3 307	$2 986	$4 174	$3 364	$3 504	$2 909
WTBC-36108	36" x 108"	$2 934	$2 529	$3 637	$3 284	$4 592	$3 701	$3 855	$3 200
WTBC-36120	36" x 120"	$3 227	$2 782	$4 001	$3 613	$5 051	$4 071	$4 240	$3 520
WTBC-36132	36" x 132"	$3 550	$3 060	$4 401	$3 974	$5 556	$4 478	$4 664	$3 872
WTBC-36144	36" x 144"	$3 905	$3 366	$4 841	$4 371	$6 112	$4 926	$5 131	$4 259
WTBC-4248	42" x 48"	$1 820	$1 820	$2 253	$2 126	$2 996	$2 396	$2 996	$2 396
WTBC-4260	42" x 60"	$2 002	$2 002	$2 479	$2 338	$3 296	$2 636	$3 296	$2 636
WTBC-4272	42" x 72"	$2 202	$2 202	$2 727	$2 572	$3 626	$2 900	$3 626	$2 900
WTBC-4284	42" x 84"	$2 422	$2 422	$2 999	$2 829	$3 988	$3 190	$3 988	$3 190
WTBC-4296	42" x 96"	$2 664	$2 664	$3 299	$3 112	$4 387	$3 509	$4 387	$3 509
WTBC-42108	42" x 108"	$2 930	$2 930	$3 629	$3 424	$4 826	$3 860	$4 826	$3 860
WTBC-42120	42" x 120"	$3 224	$3 224	$3 992	$3 766	$5 308	$4 245	$5 308	$4 245
WTBC-42132	42" x 132"	$3 546	$3 546	$4 391	$4 143	$5 839	$4 670	$5 839	$4 670
WTBC-42144	42" x 144"	$3 900	$3 900	$4 830	$4 557	$6 423	$5 137	$6 423	$5 137
WTBC-4848	48" x 48"	$1 866	$1 618	$2 400	$2 200	$3 211	$2 554	$3 211	$2 554
WTBC-4860	48" x 60"	$2 053	$1 780	$2 640	$2 420	$3 533	$2 809	$3 533	$2 809
WTBC-4872	48" x 72"	$2 258	$1 958	$2 904	$2 662	$3 886	$3 090	$3 886	$3 090
WTBC-4884	48" x 84"	$2 484	$2 154	$3 195	$2 928	$4 274	$3 399	$4 274	$3 399
WTBC-4896	48" x 96"	$2 733	$2 369	$3 514	$3 221	$4 702	$3 739	$4 702	$3 739
WTBC-48108	48" x 108"	$3 006	$2 606	$3 866	$3 543	$5 172	$4 113	$5 172	$4 113
WTBC-48120	48" x 120"	$3 307	$2 867	$4 252	$3 898	$5 689	$4 525	$5 689	$4 525
WTBC-48132	48" x 132"	$3 637	$3 153	$4 678	$4 287	$6 258	$4 977	$6 258	$4 977
WTBC-48144	48" x 144"	$4 001	$3 469	$5 145	$4 716	$6 884	$5 475	$6 884	$5 475
WTBC-5660	56" x 60"	$3 019	$2 778	$3 007	$2 936	$3 976	$2 837	$3 976	$2 837
WTBC-5672	56" x 72"	$3 321	$3 056	$3 307	$3 229	$4 374	$3 121	$4 374	$3 121
WTBC-5684	56" x 84"	$3 653	$3 362	$3 638	$3 552	$4 811	$3 433	$4 811	$3 433
WTBC-5696	56" x 96"	$4 018	$3 698	$4 002	$3 908	$5 293	$3 776	$5 293	$3 776
WTBC-56108	56" x 108"	$4 420	$4 068	$4 402	$4 298	$5 822	$4 154	$5 822	$4 154
WTBC-56120	56" x 120"	$4 862	$4 474	$4 842	$4 728	$6 404	$4 569	$6 404	$4 569

HOODS / **BOX EXHAUST**

FEATURE: Lambertson Hoods are constructed of 100% Stainless Steel.

DESCRIPTION : Type I - UL Listed Box Exhaust Hood / ETL Classified - Stainless Steel Baffle Filters / UL Listed Vapor Light Fixture (Pre-wired).

BOX EXHAUST HOODS

MODEL #	FRONT TO BACK	DIMENSIONS Length x Height	PRICE
UL-BH-48-4	48”	48” x 21”	$830.45
UL-BH-48-5	48”	60” x 21”	$934.26
UL-BH-48-6	48”	72” x 21”	$1 038.06
UL-BH-48-7	48”	84” x 21”	$1 176.47
UL-BH-48-8	48”	96” x 21”	$1 314.88
UL-BH-48-9	48”	108” x 21”	$1 436.68
UL-BH-48-10	48”	120” x 21”	$1 557.09
UL-BH-48-11	48”	132” x 21”	$1 694.12
UL-BH-48-12	48”	144” x 21”	$1 826.99
UL-BH-48-13	48”	156” x 21”	$1 957.09
UL-BH-48-14	48”	168” x 21”	$2 083.04
UL-BH-48-15	48”	180” x 21”	$2 206.23
UL-BH-48-16	48”	192” x 21”	$2 325.26
UL-BH-51-4	51”	48” x 21”	$968.86
UL-BH-51-5	51”	60” x 21”	$1 107.27
UL-BH-51-6	51”	72” x 21”	$1 245.67
UL-BH-51-7	51”	84” x 21”	$1 418.69
UL-BH-51-8	51”	96” x 21”	$1 591.70
UL-BH-51-9	51”	108” x 21”	$1 748.10
UL-BH-51-10	51”	120” x 21”	$1 903.11
UL-BH-51-11	51”	132” x 21”	$2 074.74
UL-BH-51-12	51”	144” x 21”	$2 242.21
UL-BH-51-13	51”	156” x 21”	$2 406.92
UL-BH-51-14	51”	168” x 21”	$2 567.47
UL-BH-51-15	51”	180” x 21”	$2 725.26
UL-BH-51-16	51”	192” x 21”	$2 878.89
UL-BH-54-4	54”	48” x 21”	$1 024.22
UL-BH-54-5	54”	60” x 21”	$1 176.47
UL-BH-54-6	54”	72” x 21”	$1 328.72
UL-BH-54-7	54”	84” x 21”	$1 515.58
UL-BH-54-8	54”	96” x 21”	$1 702.42
UL-BH-54-9	54”	108” x 21”	$1 872.66
UL-BH-54-10	54”	120” x 21”	$2 041.52
UL-BH-54-11	54”	132” x 21”	$2 226.99
UL-BH-54-12	54”	144” x 21”	$2 408.30

BOX EXHAUST HOODS

MODEL #	FRONT TO BACK	DIMENSIONS Length x Height	PRICE
UL-BH-54-13	54”	156” x 21”	$2 586.85
UL-BH-54-14	54”	168” x 21”	$2 761.25
UL-BH-54-15	54”	180” x 21”	$2 932.87
UL-BH-54-16	54”	192” x 21”	$3 100.35
UL-BH-60-4	60”	48” x 21”	$1 079.58
UL-BH-60-5	60”	60” x 21”	$1 245.67
UL-BH-60-6	60”	72” x 21”	$1 411.76
UL-BH-60-7	60”	84” x 21”	$1 612.46
UL-BH-60-8	60”	96” x 21”	$1 813.15
UL-BH-60-9	60”	108” x 21”	$1 997.23
UL-BH-60-10	60”	120” x 21”	$2 179.93
UL-BH-60-11	60”	132” x 21”	$2 379.24
UL-BH-60-12	60”	144” x 21”	$2 574.39
UL-BH-60-13	60”	156” x 21”	$2 766.78
UL-BH-60-14	60”	168” x 21”	$2 955.02
UL-BH-60-15	60”	180” x 21”	$3 140.48
UL-BH-60-16	60”	192” x 21”	$3 321.80
NFPA-BH-42-4	42”	48” x 21”	$899.65
NFPA-BH-42-5	42”	60” x 21”	$1 003.46
NFPA-BH-42-6	42”	72” x 21”	$1 107.27
NFPA-BH-42-7	42”	84” x 21”	$1 245.68
NFPA-BH-42-8	42”	96” x 21”	$1 384.08
NFPA-BH-42-9	42”	108” x 21”	$1 505.88
NFPA-BH-42-10	42”	120” x 21”	$1 626.30
NFPA-BH-42-11	42”	132” x 21”	$1 763.32
NFPA-BH-42-12	42”	144” x 21”	$1 896.19
NFPA-BH-42-13	42”	156” x 21”	$2 026.30
NFPA-BH-42-14	42”	168” x 21”	$2 152.25
NFPA-BH-42-15	42”	180” x 21”	$2 275.43
NFPA-BH-42-16	42”	192” x 21”	$2 394.96

HOODS / **BOX EXHAUST W / MAKE-UP AIR**

FEATURE: Lambertson Hoods are constructed of 100% Stainless Steel.

DESCRIPTION : Type I - UL Listed Box Exhaust Hood w/ MUA Plenum / ETL Classified - Stainless Steel Baffle Filters / UL Listed Vapor Light Fixture (Pre-wired).

BOX EXHAUST W / MAKE-UP AIR

MODEL #	FRONT TO BACK	DIMENSIONS Length x Height	PRICE
UL-BH-MUA-48-4	48”	48” x 21”	$1 107.27
UL-BH-MUA-48-5	48”	60” x 21”	$1 280.28
UL-BH-MUA-48-6	48”	72” x 21”	$1 453.29
UL-BH-MUA-48-7	48”	84” x 21”	$1 660.90
UL-BH-MUA-48-8	48”	96” x 21”	$1 868.51
UL-BH-MUA-48-9	48”	108” x 21”	$2 059.52
UL-BH-MUA-48-10	48”	120” x 21”	$2 249.13
UL-BH-MUA-48-11	48”	132” x 21”	$2 398.62
UL-BH-MUA-48-12	48”	144” x 21”	$2 595.16
UL-BH-MUA-48-13	48”	156” x 21”	$2 788.93
UL-BH-MUA-48-14	48”	168” x 21”	$2 979.93
UL-BH-MUA-48-15	48”	180” x 21”	$3 166.78
UL-BH-MUA-48-16	48”	192” x 21”	$3 349.48
UL-BH-MUA-51-4	51”	48” x 21”	$1 245.67
UL-BH-MUA-51-5	51”	60” x 21”	$1 453.29
UL-BH-MUA-51-6	51”	72” x 21”	$1 660.90
UL-BH-MUA-51-7	51”	84” x 21”	$1 903.12
UL-BH-MUA-51-8	51”	96” x 21”	$2 145.33
UL-BH-MUA-51-9	51”	108” x 21”	$2 370.93
UL-BH-MUA-51-10	51”	120” x 21”	$2 595.16
UL-BH-MUA-51-11	51”	132” x 21”	$2 779.24
UL-BH-MUA-51-12	51”	144” x 21”	$3 010.38
UL-BH-MUA-51-13	51”	156” x 21”	$3 238.75
UL-BH-MUA-51-14	51”	168” x 21”	$3 464.36
UL-BH-MUA-51-15	51”	180” x 21”	$3 685.81
UL-BH-MUA-51-16	51”	192” x 21”	$3 903.11
UL-BH-MUA-54-4	54”	48” x 21”	$1 301.04
UL-BH-MUA-54-5	54”	60” x 21”	$1 522.49
UL-BH-MUA-54-6	54”	72” x 21”	$1 743.94
UL-BH-MUA-54-7	54”	84” x 21”	$2 000.00
UL-BH-MUA-54-8	54”	96” x 21”	$2 256.06
UL-BH-MUA-54-9	54”	108” x 21”	$2 495.50
UL-BH-MUA-54-10	54”	120” x 21”	$2 733.56
UL-BH-MUA-54-11	54”	132” x 21”	$2 931.49
UL-BH-MUA-54-12	54”	144” x 21”	$3 176.47

BOX EXHAUST W / MAKE-UP AIR

MODEL #	FRONT TO BACK	DIMENSIONS Length x Height	PRICE
UL-BH-MUA-54-13	54”	156” x 21”	$3 418.69
UL-BH-MUA-54-14	54”	168” x 21”	$3 658.13
UL-BH-MUA-54-15	54”	180” x 21”	$3 893.43
UL-BH-MUA-54-16	54”	192” x 21”	$4 124.57
UL-BH-MUA-60-4	60”	48” x 21”	$1 356.40
UL-BH-MUA-60-5	60”	60” x 21”	$1 591.70
UL-BH-MUA-60-6	60”	72” x 21”	$1 826.99
UL-BH-MUA-60-7	60”	84” x 21”	$2 096.89
UL-BH-MUA-60-8	60”	96” x 21”	$2 366.78
UL-BH-MUA-60-9	60”	108” x 21”	$2 620.07
UL-BH-MUA-60-10	60”	120” x 21”	$2 871.97
UL-BH-MUA-60-11	60”	132” x 21”	$3 083.74
UL-BH-MUA-60-12	60”	144” x 21”	$3 342.56
UL-BH-MUA-60-13	60”	156” x 21”	$3 598.62
UL-BH-MUA-60-14	60”	168” x 21”	$3 851.90
UL-BH-MUA-60-15	60”	180” x 21”	$4 101.04
UL-BH-MUA-60-16	60”	192” x 21”	$4 346.02
NFPA-BH-MUA-42-4	42”	48” x 21”	$1 176.47
NFPA-BH-MUA-42-5	42”	60” x 21”	$1 349.48
NFPA-BH-MUA-42-6	42”	72” x 21”	$1 522.49
NFPA-BH-MUA-42-7	42”	84” x 21”	$1 730.11
NFPA-BH-MUA-42-8	42”	96” x 21”	$1 937.72
NFPA-BH-MUA-42-9	42”	108” x 21”	$2 128.72
NFPA-BH-MUA-42-10	42”	120” x 21”	$2 318.34
NFPA-BH-MUA-42-11	42”	132” x 21”	$2 467.82
NFPA-BH-MUA-42-12	42”	144” x 21”	$2 664.36
NFPA-BH-MUA-42-13	42”	156” x 21”	$2 858.13
NFPA-BH-MUA-42-14	42”	168” x 21”	$3 049.13
NFPA-BH-MUA-42-15	42”	180” x 21”	$3 235.99
NFPA-BH-MUA-42-16	42”	192” x 21”	$3 418.69

IF YOU HAVE ANY QUESTIONS, CONTACT US AT

775.857.1100 / 1.800.548.3324

SALES@LAMBERTSON.COM

OR VISIT OUR WEBSITE

WWW.LAMBERTSON.COM

Thanks for your interest.

LAMBERTSON
Stainless Steel Products Manufacturer

STAINLESS STEEL PRODUCTS MANUFACTURER AND HIGH QUALITY CUSTOM FABRICATION

All our standard products are suitable for different categories of clients such as:

1. Food Service Dealers
2. Plumbing Wholesalers
3. Contractors

Visit our website for more information
www.lambertson.com

DAVINCI
Compass Group

NEVADA, USA
1335 Alexandria Court, Sparks, 89434
P : 775.857.1100 **1.800.548.3324** **F :** 775.857.3289
www.davincicompass.us

QUÉBEC, CANADA
240 Industriel Blvd, Saint-Germain-de-Grantham, J0C 1K0
P : 819.395.5151 **1.855.395.5252** **F :** 819.395.5343
www.davincicompass.ca

Your authorized retailer:

Because we are continually improving our products, Lambertson reserves the right to change product specifications without prior notice. **V-7-16**